V

Standard/Low Power Solenoid Valve (3/2)

V321

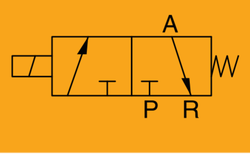

◎ Product Features

* Various voltages and working styles are available.
* Different surface treatment, thread types (G,PT,NPT) are available.
* With manual installation, easy to debugging

◎ How to Order?

Low Power Solenoid Valve

Series No. — Valve Body ID code — ID Code — Positions — Ways — Controls — Port Size — Voltage — Connection Mode — Cover Color — Patchcord — Thread Type — Valves

- Series No.: N
- Valve Body ID code: Blank: Standard valve body; P: Europeans valve body (Only for 3/2 way)
- ID Code: M: Standard armature +Engergy saving coil
- Positions: 2:2 positions
- Ways: 3:3 ways
- Controls: 1: Single control
- Port Size: M5: M5; 06: 1/8 "
- Voltage: E1: AC110V; E2: AC220V; E4: DC24V
- Connection Mode: Blank: DIN connector type; L: Plug–in Type
- Cover Color: Blank: Brown translucent; J: Colorless and translucent
- Patchcord: Blank:Patchcord length is 0.3 meter; 0.6M:Patchcord length is 0.6 meter; 1M:Patchcord length is 1 meter (Options for "L:Plug–in type" Only)
- Thread Type: Blank: G; P: PT; T: NPT
- Valves: Blank: 1Valve (No mounting accessory); 2F:2 Valves; 3F:3 Valves; ..... ; 10F:10 Valves

Note: Only V series solenoid valve has port size M5 and only the 1 valve type (no mounting accessory)

Standard Solenoid Valve

Series No. — Ways — Positions — Controls — Port Size — ID Code — Voltage — Connection Mode — Cover Color — Patchcord — Thread Type — Valves

- Series No.: V: Standard valve body; VP: European valve body
- Ways: 3:3 ways
- Positions: 2:2 positions
- Controls: 1: Single control
- Port Size: V321 M5:M5; 06: 1/8 "; VP321 06: 1/8 "
- ID Code: Blank: Standard type
- Voltage:

E1: AC110V	E6: AC36V
E2: AC220V	E7: AC24V
E3: AC380V	E8: DC110V
E4: DC24V	E9: DC48V
E5: DC12V	E10: DC36V

- Connection Mode: Blank: DIN connector; F: Flying leads; L: Plug–in Type
- Cover Color: Blank: Brown translucent; J: Colorless and translucent
- Patchcord: Blank:Patchcord length is 0.3 meter; 0.6M:Patchcord length is 0.6 meter; 1M:Patchcord length is 1 meter (Options for "L:Plug–in type" and "F:Flying leads type" Only)
- Thread Type: Blank: G; P: PT; T: NPT
- Valves: Blank: 1Valve (No mounting accessory); 2F:2 Valves; 3F:3 Valves; ..... ; 10F:10 Valves

Note: Only V series solenoid valve has port size M5 and only the 1 valve type (no mounting accessory)

Order Example:

N series solenoid valve, standard pilot+Engergy saving coil, 3/2 way, single control,1/8" port size, standard coil,DC24V, 2 valves DIN connector, G thread, ERP code is: NM231–06E4–2F

◎ Specifications

Model No.	NM231–M5	NM231–06	NPM231–06	V321–M5	V321–06	VP321–06
Working medium	Clean air (After 40 μm filteration)					
Acting type	Direct acting					
Orifice (mm)	1.2					
Port size	M5	G 1/8		M5	G 1/8	
Lubrication	Not required					
Working pressure (MPa)	0~0.8					
Guaranteed pressure (MPa)	1.2					
Working temperature (℃)	–5~60(No freezing)					
Voltage range	–15% – +10%					
Power consumption	DC24V:0.7W AC220V:0.9VA AC110V:1.4VA			AC:4VA DC:3W		AC:7VA DC:6.5W
Insulation class	Class F					
Protective class	IP65 (DIN40050)					
Max. acting frequency	10 cycles/s					
Seal material	NBR					
Activate time	Below 0.05 Sec.					
Weight (g)	141		138	141		138

Internal Structure

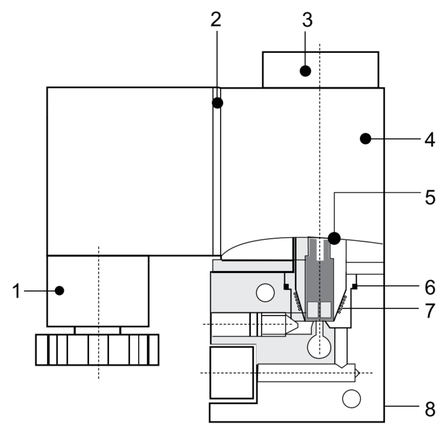

No.	Designation
1	Connector
2	Connector washer
3	Nut
4	Coil
5	Pilot units
6	O–Ring
7	Spring
8	Valve body

Main Parts Material

Part name	Material
Valve body	Aluminum alloy
Connector	Engineered plastics
Connector washer	NBR
Pilot units	Pure steel+Cu+Stainless steel
Nut	POM+Carbon steel
Coil	Brass Wire covered with heat resistance colophony

Flow Chat

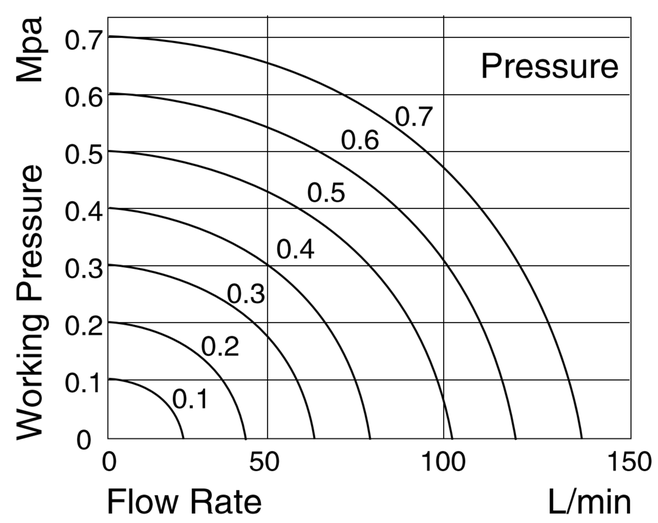

Main Dimension

V321

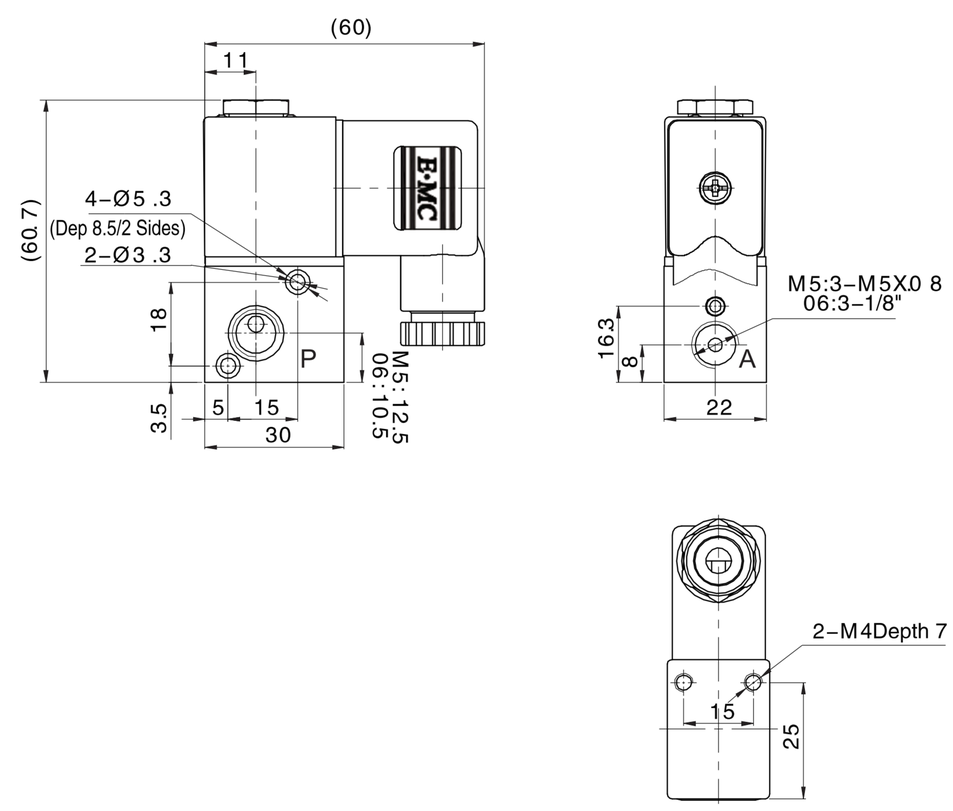

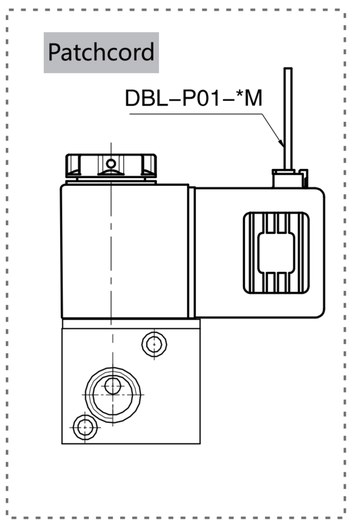

VP321

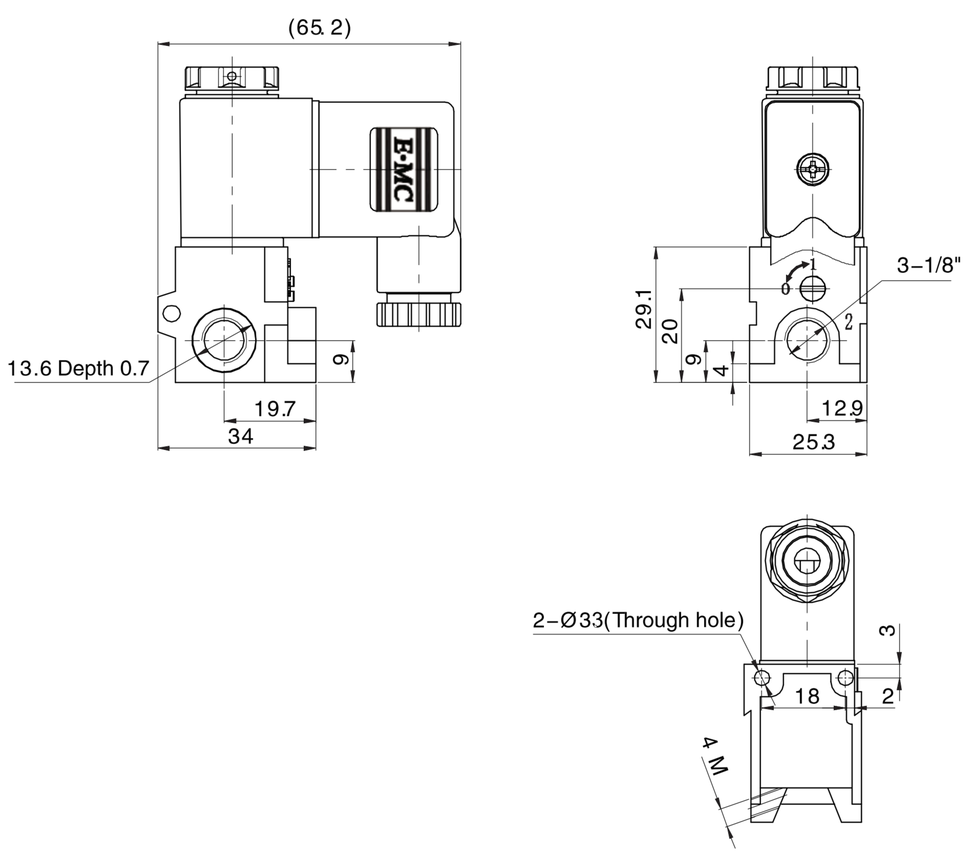

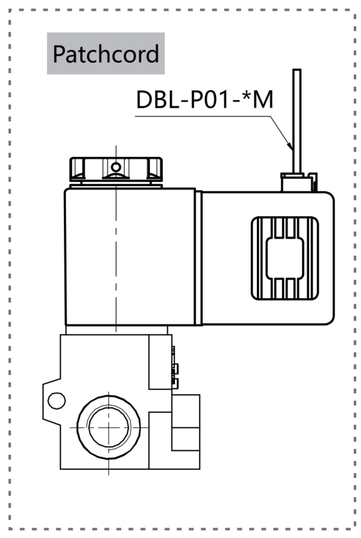

Combination of Schematic Diagram

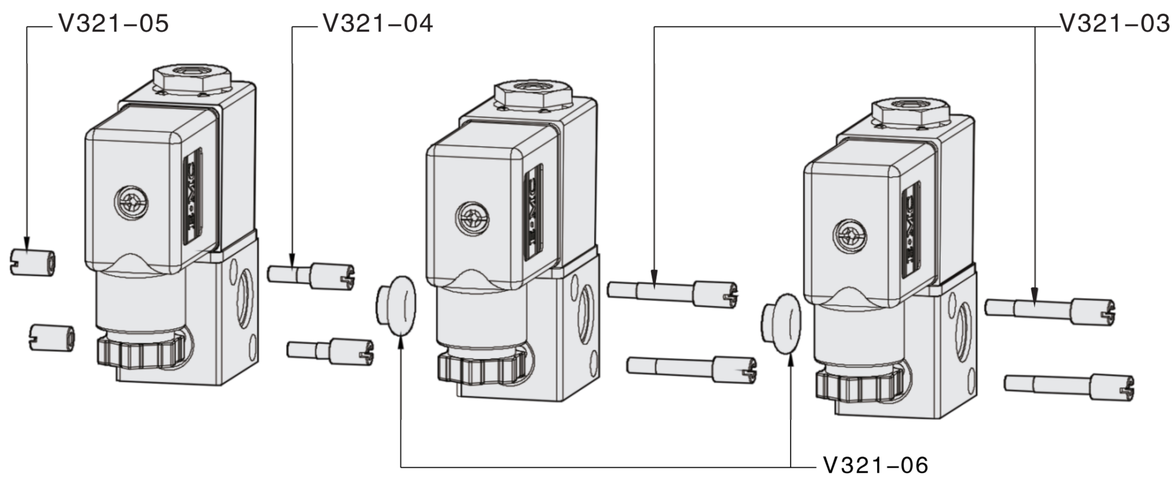

Mounting accessory order details:

Valve Quantity	V321-06□ The finished valves	V321-03	V321-04	V321-05	V321-06
V321-06□-□-2F	2	2	2	2	1
V321-06□-□-3F	3	4	2	2	2
……	……	……	……	……	……
V321-06□-□-nF	n	2(n-1)	2	2	n-1
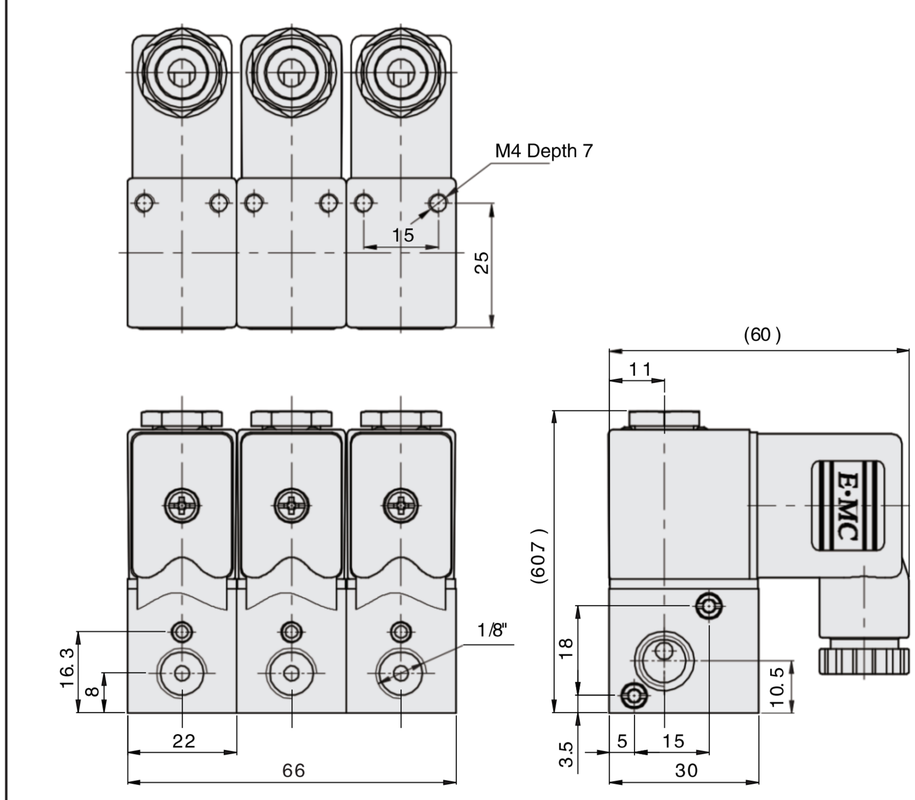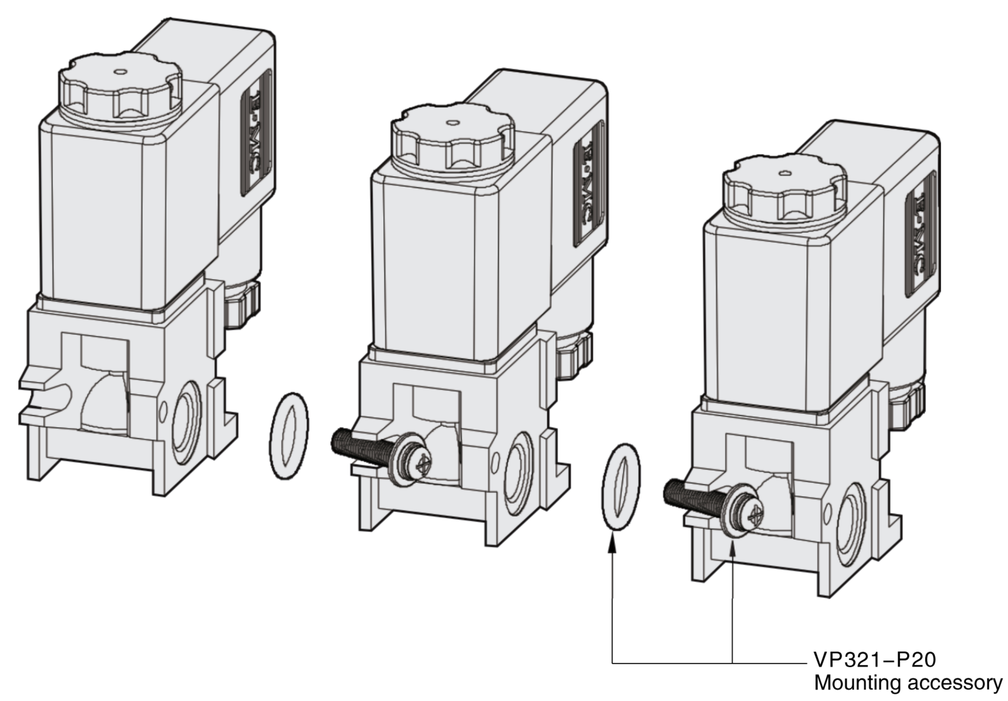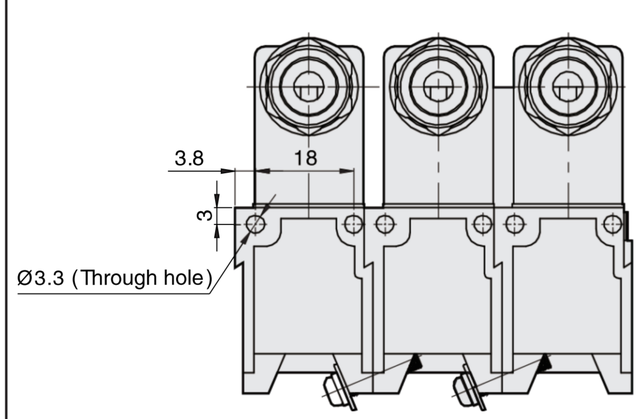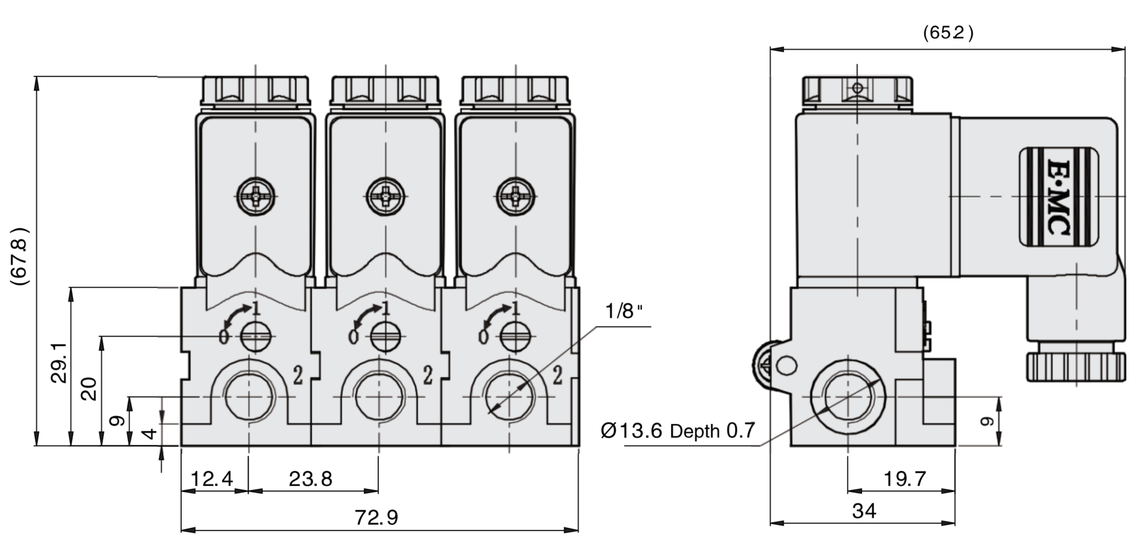
Note : n indicates valve quantity， and 2≤n≤10