RV

NAMUR Solenoid Valve(5/2,5/3)

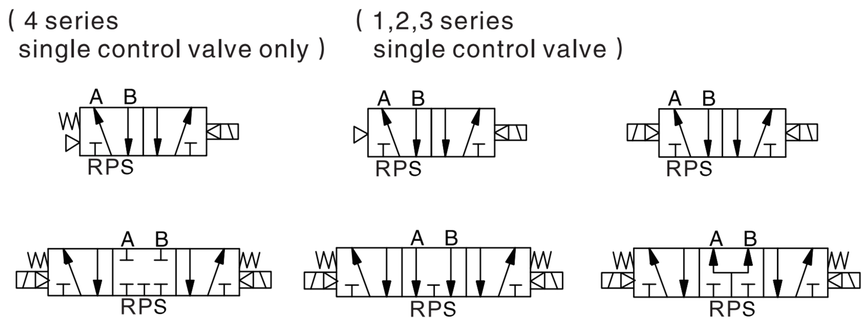

How to Order?

Low Power Solenoid Valve

Series No.	Valve Body ID Code	ID Code	Positions	Ways	Controls	Initial Status	Port Size	Reset Type	Valve Body Type	Voltage	Connection Mode	Cover Color	Patchcord	Thread Type
N	1：1Series 2：2Series 3：3Series 4：4Series	R: Standard armature +Engergy saving coil	2:2 positions 3:3 positions	5:5 ways	1: Single control 2: Double control	C: Center close P: Center pressure E: Center exhaust (only for 5/3 ways)	M5:M5 06:1/8" 08:1/4" 10:3/8" 15:1/2"	Blank: Spring return (4 series single solenoid control only) Q: Air return (1,2,3 series single solenoid control)	M:NAMUR	E1:AC110V E2:AC220V E4:DC24V(for 1series, only DC24V available)	Blank: DIN connector type L: Plug–in Type K: Water proof connector type (only for 2,3,4 series)	Blank: Brown translucent J: Colorless and translucent B: Black(only black color available for K/M)	Blank:Patchcord length is 0.3 meter 0.6M:Patchcord length is 0.6 meter 1M:Patchcord length is 1 meter (Options for "L:Plug–in type" Only)	Blank: G P: PT T: NPT

Order Example:

RV series Engergy saving solenoid valve,5/2 ways,1 series valve body size, double control,1/8 "port size, NUMAR type, DC24V,DIN connector, G thread, ERP code is N1R252–06ME4

Specifications

Model	N1R251–M5QM N1R252–M5M N1R352–M5M	N1R251–06QM N1R252–06M N1R352–06M	N2R251–06QM N2R252–06M N2R352–06M	N2R251–08QM N2R252–08M N2R352–08M	N3R251–08QM N3R252–08M N3R352–08M	N3R251–10QM N3R252–10M N3R352–10M	N4R251–10M N4R252–10M N4R352–10M	N4R251–15M N4R252–15M N4R352–15M
Port Size	M5	G1/8	G1/8	G1/4(Ex.G1/8)	G1/4	G3/8(Ex.G1/8)	G3/8	G1/2
Sectional area(mm)	5/2：5.5(CV=0.31) 5/3：5.5(CV=0.28)	5/2：12(CV=0.67) 5/3：9(CV=0.50)	5/2：14(CV=0.78) 5/3：12(CV=0.67)	5/2：16(CV=0.89) 5/3：12(CV=0.67)	5/2：25(CV=1.40) 5/3：18(CV=1.00)	5/2：30(CV=1.68) 5/3：18(CV=1.00)	5/2：50(CV=2.79) 5/3：30(CV=1.67)	5/2：50(CV=2.79) 5/3：30(CV=1.67)
Working medium	Clean air(After 40 μm filteration)							
Acting type	Internal pilot							
Reset type	Air reset						Spring reset / Air reset	
Lubrication	Not required							
Working pressure(MPa)	0.15~0.8							
Guaranteed Pressure(MPa)	1.2							
Working temperature(℃)	–20~70（No freezing）							
Voltage Range	–15%~10%							
Power Consumption	DC24V:0.6W		DC24V:0.7W AC220V:0.9VA AC110V:1.4VA					
Insulation Class	Class F							
Protective Class	IP65(DIN40050)							
Max. acting frequency	5 cycles/s							
Activate time(S)	<0.05							
Weight(g)	N1R251–M:113 N1R252–M:176 N1R352–M:186		N2R251–M:208 N2R252–M:306 N2R352–M:349		N3R251–M:300 N3R252–M:409 N3R352–M:459		N4R251–M:533 N4R252–M:666 N4R352–M:755	

How to Order?

Standard Solenoid Valve

Series No.	Ways	Positions	Valve Body ID Code	Controls	Initial Status	—	Port Size	Reset Type	Valve Body Type	ID Code	Voltage	Connection Mode	Cover Color	—Patchcord—	Thread Type

- Series No.: RV(Solenoid valve)
- Ways: 5:5 ways
- Positions: 2:2 positions; 3:3 positions
- Valve Body ID Code: 1：1Series; 2：2Series; 3：3Series; 4：4Series
- Controls: 1: Single control; 2: Double control
- Initial Status: C: Center close; P: Center pressure; E: Center exhaust (only for 5/3 ways)
- Port Size: M5:M5; 06:1/8"; 08:1/4"; 10:3/8"; 15:1/2"
- Reset Type: Blank: Spring return (Only apply to 4 series single control valve); Q: Air return (Only apply to 1,2,3 series single control valve)
- Valve Body Type: M:NAMUR type
- ID Code: Blank: Standard type; A: Amisco coil
- Voltage:

E1: AC110V	E6: AC36V
E2: AC220V	E7: AC24V
E3: AC380V	E8: DC110V
E4: DC24V	E9: DC48V
E5: DC12V	E10: DC36V

- Connection Mode: Blank: DIN connector; L: Plug–in Type; F: Flying leads; K: Waterproof DIN connector (Only 2、3、4 series is opitional for K/M)
- Cover Color: Blank: Brown translucent; J: Colorless and translucent; B: Black(only black color available for K/M)
- Patchcord: Blank:Patchcord length is 0.3 meter; 0.6M:Patchcord length is 0.6 meter; 1M:Patchcord length is 1 meter (Options for "L:Plug–in type" and "F:Flying leads type" Only)
- Thread Type: Blank: G; P: PT; T: NPT

Order Example:

RV series solenoid valve,5/2 ways,1 series valve body size, double control,1/8 "port size, NUMAR type, standard coil, DC24V, Fly leads connector, G thread, ERP code is RV5212–06ME2F

Specifications

Model	RV5211–M5QM RV5212–M5M RV5312–M5M	RV5211–06QM RV5212–06M RV5312–06M	RV5221–06QM RV5222–06M RV5322–06M	RV5221–08QM RV5222–08M RV5322–08M	RV5231–08QM RV5232–08M RV5332–08M	RV5231–10QM RV5232–10M RV5332–10M	RV5241–10M RV5242–10M RV5342–10M	RV5241–15M RV5242–15M RV5342–15M
Port Size	M5	G1/8	G1/8	G1/4(Ex.G1/8)	G1/4	G3/8(Ex.G1/4)	G3/8	G1/2
Sectional area(mm)	5/2：5.5(CV=0.31) 5/3：5.5(CV=0.28)	5/2：12(CV=0.67) 5/3：9(CV=0.50)	5/2：14(CV=0.78) 5/3：12(CV=0.67)	5/2：16(CV=0.89) 5/3：12(CV=0.67)	5/2：25(CV=1.40) 5/3：18(CV=1.00)	5/2：30(CV=1.68) 5/3：18(CV=1.00)	5/2：50(CV=2.79) 5/3：30(CV=1.67)	5/2：50(CV=2.79) 5/3：30(CV=1.67)
Working medium	Clean air(After 40 μm filteration)							
Acting type	Internal pilot							
Reset type	Air reset						Spring reset / Air reset	
Lubrication	Not required							
Working pressure(MPa)	0.15~0.8							
Guaranteed Pressure(MPa)	1.2							
Working temperature(℃)	–20~70(No freezing)							
Voltage Range	–15%~10%							
Power Consumption	DC:2.8W ; AC:3.0VA	DC:3.0W ; AC:4.0VA						
Insulation Class	Class F							
Protective Class	IP65(DIN40050)							
Max. acting frequency	5/2：5 cycles/s；5/3：3 cycles/s							
Activate time(S)	<0.05							
Weight(g)	RV5211: M:113 RV5212: M:176 RV5312: M:186	RV5221: M:208 RV5222: M:306 RV5322: M:349		RV5231: M:300 RV5232: M:409 RV5332: M:459			RV5241: M:533 RV5242: M:666 RV5342: M:755	

Flow Chat

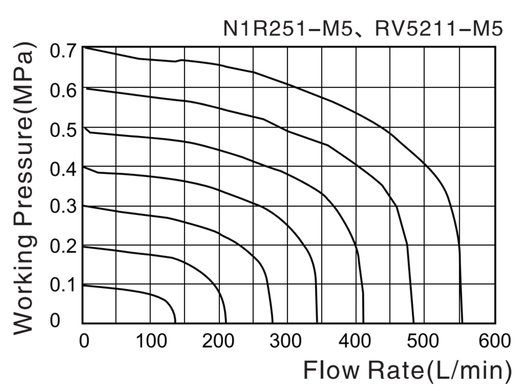

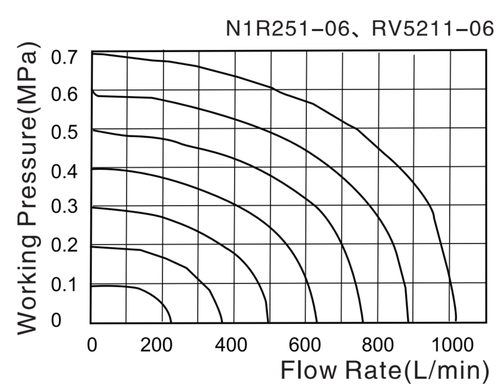

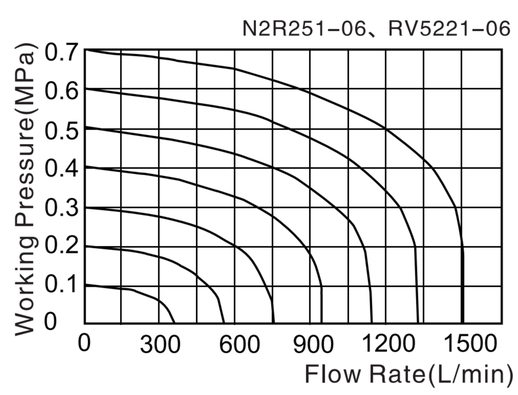

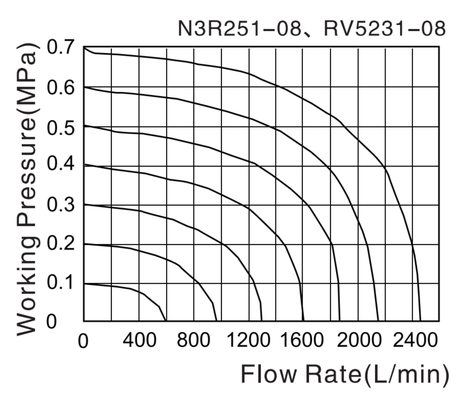

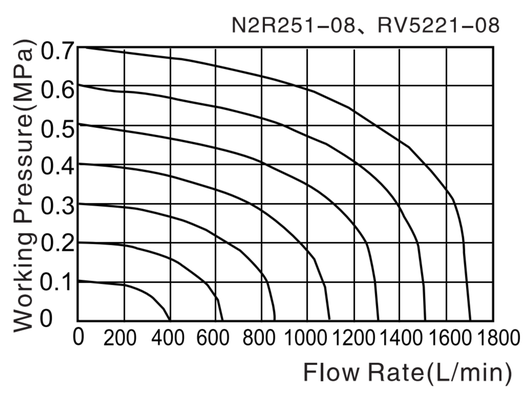

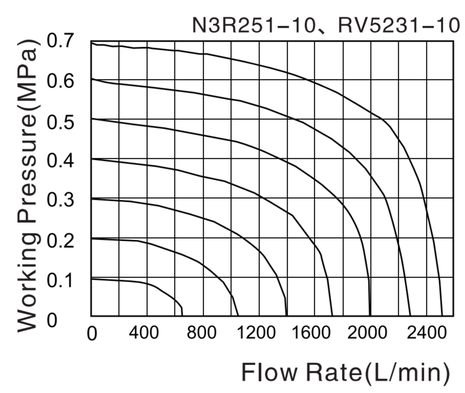

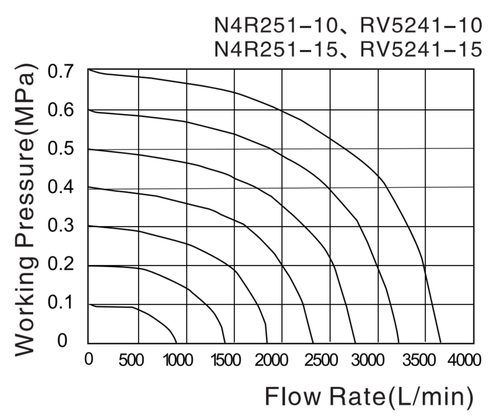

Internal Structure

Single Solenoid Valve

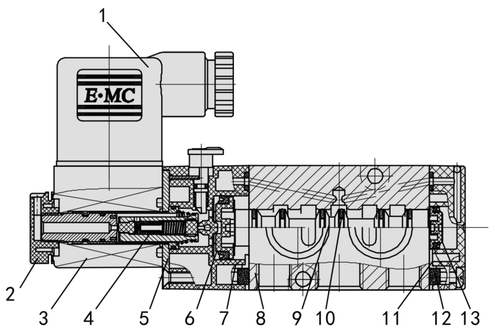

Double Solenoid Valve

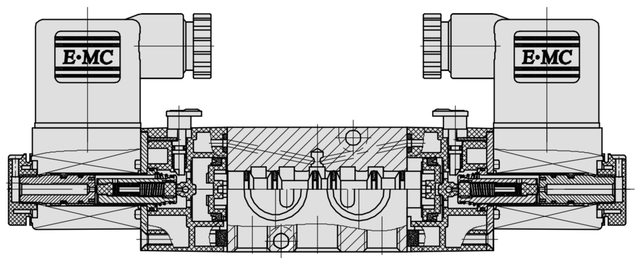

5/3 Ways Solenoid Valve

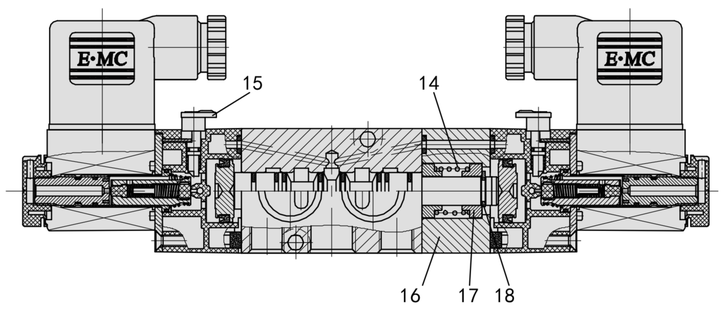

No.	Part Name	Material
1	Connector	Engineered plastics
2	Fixing Nut	POM
3	Coil	Brass+Thermoset Resin
4	Pilot Units	Pure Iron+Brass +Stainless Steel
5	Plate	Carton Steel
6	Piston	POM
7	Pilot Seat	Engineered plastics
8	Valve Body	Aluminum Alloy
9	Spool	Aluminum Alloy
10	O ring	NBR
11	Rear Cover	Engineered plastics
12	Filter	High Molecular Material
13	Piston	Engineered plastics
14	Spring	Stainless Steel
15	Manual Override	Engineered plastics
16	Back Seat	Aluminum Alloy
17	Spring Seat	Aluminum Alloy
18	C type buckle	65Mn

Main Dimension

Single Solenoid Valve

DIN Type

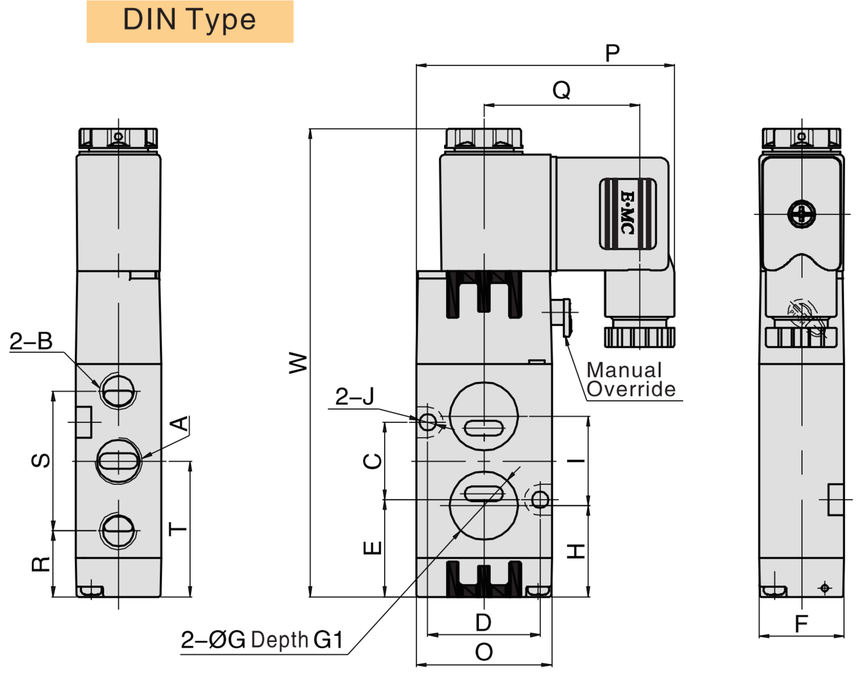

Patchcord

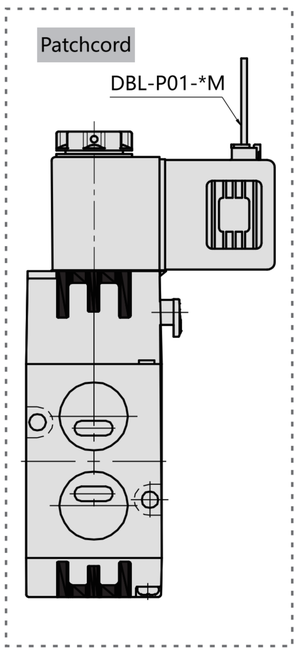

Flying Lead Type

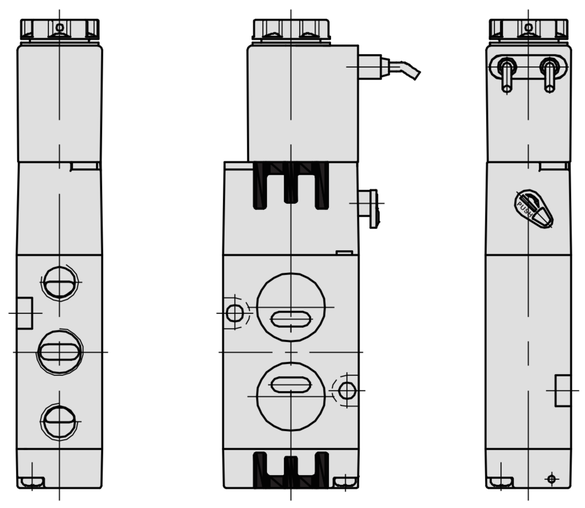

(mm)

Model/Sign	A	B	C	D	E	F	G	G1	H	I	J	O	P	Q	R	S	T	W
RV5221–08QM	G1/4	G1/8	20	29	25	22	17.6	1.5	23.5	23	4.3	35	66.7	40.2	17	36	35	120.7
RV5231–08QM	G1/4	G1/4	24	32	32.1	27	19.6	1.5	32.1	24	5.2	40	69.2	40.2	21.6	45	44.1	139.3
RV5231–10QM	G3/8	G1/4	24	32	32.1	27	19.6	1.5	32.1	24	5.2	40	69.2	40.2	21.6	45	44.1	139.3

Note: N series energy saving solenoid valve have same sizes as above table.

Double Solenoid Valve

DIN Type

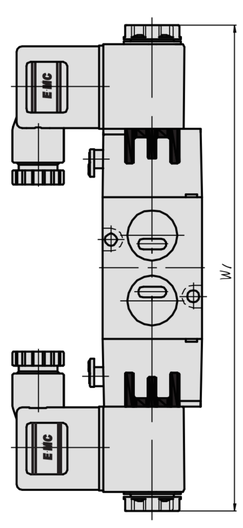

Flying Lead Type

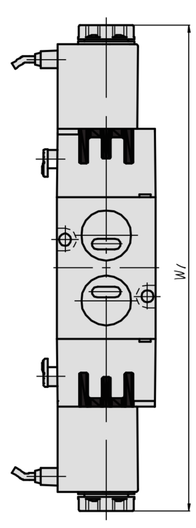

Model/Sign	W1
RV5222–08QM	171.4
RV5232–08QM	190.4
RV5232–10QM	190.4