RV

NAMUR Air Control Valve(3/2, 5/2)

RVA Series 3/2

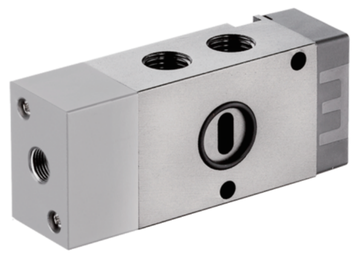

Single Air Control Valve

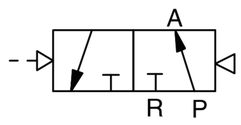

RVA Series 5/2

Single Air Control Valve

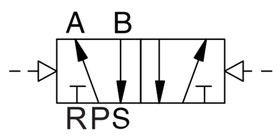

How to Order?

Low Power Solenoid Valve

Series No.	Ways	Positions	Valve body ID code	Controls	Initial Status —	Port size	Reset Type	Valve Type —	Thread Type
RVA	3：3 ways 5：5 ways	2:2 positions	2：2Series 3：3Series	1: Single control	3/2 Way Blank:Normal close H:Normal open	2 series 08：1/4 " 3 series 08：1/4 " 10：3/8 "	Q: Air return	M: NAMUR	Bland：G P：PT T：NPT

Order Example:

RV series air control valve, 3/2 ways,2 series valve body size, normal close, single control,1/4 "port size, gas reset, NUMAR type, PT thread, ERP code is RVA3221–08QM–P

Specifications

Model	RVA5221–08M	RVA5231–08M	RVA5231–10M
Port Size	G1/4(Exhaust G1/8)	G1/4	G3/8(Exhaust G1/4)
Sectional area(mm)	2P：16(CV=0.89)	2P：25(CV=1.40)	2P：30(CV=1.68)
Working Medium	Clean air(After 40 μ m filteration)		
Acting type	Outer air control		
Reset type	Air reset		Spring Reset/Air reset
Lubrication	Not Required		
Working Pressure(MPa)	0.15~0.8		
Guatranteed Pressure(MPa)	1.2		
Working Temperature(℃)	–20~70（No freezing）		
Insulation Class	F Class		
Max.acting frequnency	2 Positon：5 Cycles/s		

Note: 2P：2 Position 3P：3 Position

Specifications

Model	RVA3221–08M	RVA3231–08M	RVA3231–10M
Port Size	G1/4	G1/4	G3/8
Sectional area(mm)	16(CV=0.89)	25(CV=1.40)	30(CV=1.68)
Working Medium	Clean air(After 40 μ m filteration)		
Acting type	Outer air control		
Reset type	Air reset		
Lubrication	Not Required		
Working Pressure(MPa)	0.15~0.8		
Guatranteed Pressure(MPa)	1.2		
Working Temperature(℃)	–20~70 (No freezing)		
Max.acting frequnency	5 Cycles/s		

Internal Structure

3/2 Way

Single Air Control(N.C)

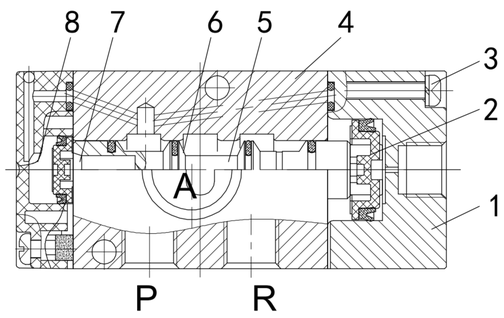

Single Air Control(N.O)

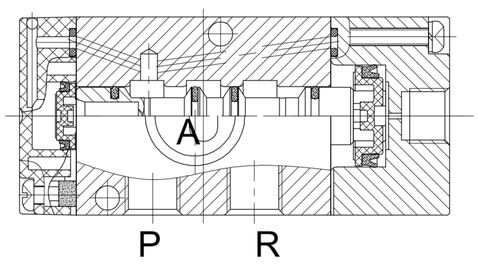

No.	Part Name	Material
1	Air Control Cover	Aluminum alloy
2	Piston	POM
3	Nut	Carbon steel
4	Valve body	Aluminum alloy
5	Spool	Aluminum alloy
6	O–ring	NBR
7	Piston	POM
8	Rear cover	Zinc Alloy

5/2 Way

Single Air Control

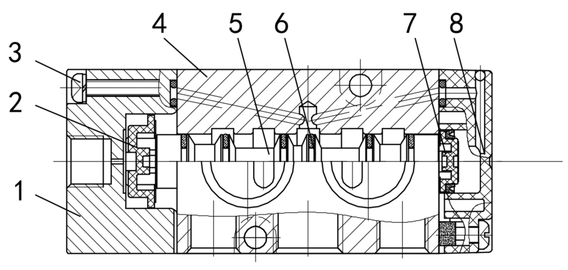

No.	Part Name	Material
1	Air Control Cover	Aluminum alloy
2	Piston	POM
3	Nut	Carbon steel
4	Valve body	Aluminum alloy
5	Spool	Aluminum alloy
6	O–ring	NBR
7	Piston	POM
8	Rear cover	Zinc Alloy
9	Back seat	Aluminum alloy
10	Spring seat	Aluminum alloy
11	C type buckle	65Mn

◎ Main Dimension

3/2 Way

Single Air Control

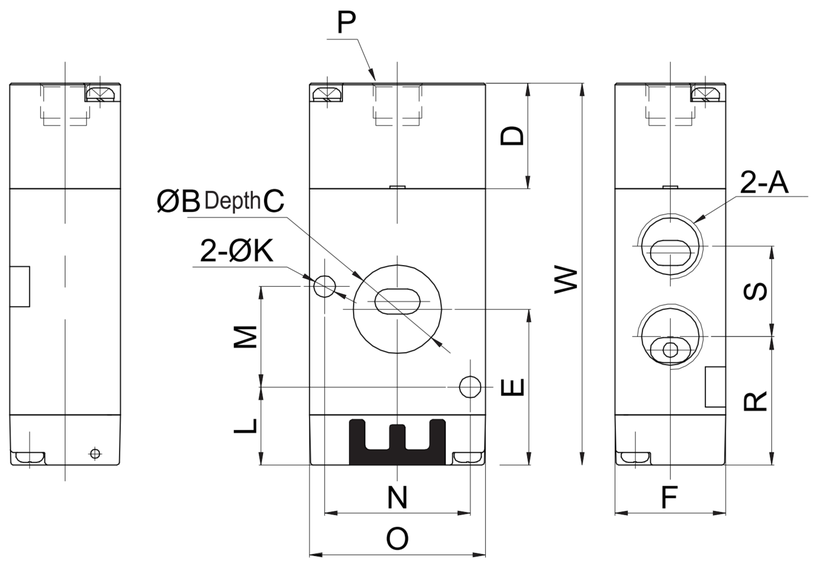

(mm)

Model/Sign	A	B	C	D	E	F	K	L	M	N	O	P	R	S	W	W1*
RVA3221–08QM	G1/4	17.6	1.5	21	31	22	4.3	15.5	20	29	35	G1/8	25.5	18	76	87
RVA3231–08QM	G1/4	19.6	1.5	23	42.1	27	5.2	18.1	24	32	40	G1/8	31.1	21	94.6	106
RVA3231–10QM	G3/8	19.6	1.5	23	42.1	27	5.2	18.1	24	32	40	G1/8	30.1	23	94.6	106

Note: The dimensions of N.O type and N.C type are same, w1 is double control direction valve's dimensions.

5/2 Way

Single Air Control

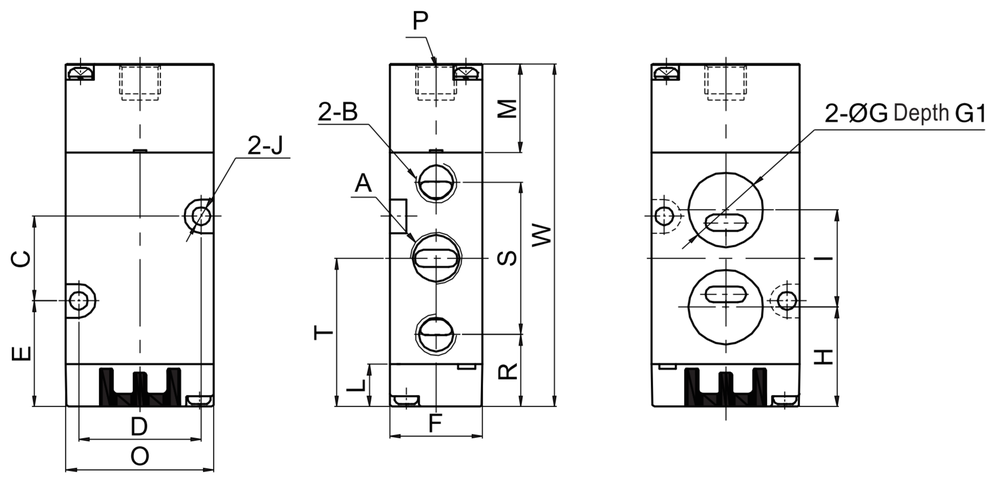

(mm)

Model/Sign	A	B	C	D	E	F	G	G1	H	I	J	M	O	P	R	S	T	W	W1*	W2*
RVA5221–08QM	G1/4	G1/8	20	29	25	22	17.6	1.5	23.5	23	4.3	21	35	G1/8	17	36	35	81	92	111
RVA5231–08QM	G1/4	G1/4	24	32	32.1	27	19.6	1.5	32.1	24	5.2	23	40	G1/8	21.6	45	44.1	99.6	111	130
RVA5231–10QM	G3/8	G1/4	24	32	32.1	27	19.6	1.5	32.1	24	5.2	23	40	G1/8	21.6	45	44.1	99.6	111	130

Note:W1 is double control direction valve's dimensions, W2 is three position air control valve's demensions.