SG

Compact Guide Cylinder

SG:New thin type cylinder with guide bar (with magnet, cushion buffer)

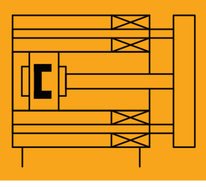

Specifications

Bore(mm)		6	10	12	16	20	25	32	40	50	63
Acting type		Double acting									
Working medium		Clean Air(after 40 μ m filtration)									
Working pressure (MPa)		0.2~0.7		0.1~1.0		0.15~1.0					
Guaranteed pressure (MPa)		1.5									
Working temperature (℃)		–20~70(No freezing)									
Piston speed (mm/s)		30~500									
Cushion		Rubber cushion									
Stroke tolerance(mm)		$^{+1.0}_{0}$									
No–rotating precision ★	SGL	—		± 0.08°		± 0.07°		± 0.06°		± 0.05°	
	SGM	± 0.10°				± 0.09°		± 0.08°		± 0.06°	
Port Size		M3 × 0.5		M5 × 0.8		G1/8 ❶				G1/4 ❶	

★ Retract position. ❶ PT、NPT port size is optional.

How to Order?

Series No	Type No	Type	Bore	X	Stroke	–	Magnet No	–	Thread Type
SG	L: Linear bearing M: Slide bearing	Blank: Standard type J: Adjuster type	6 10 12 … 63		25 50 75 …		S : With magnet		Blank: G P : PT T : NPT

Order Example:

SG series, linear bearing, bore 16mm, stroke 30mm, EPR code is: SGL16X30–S

Cylinders with cylinder bore of Ø6 and Ø10 are available in non–adjustable types and cylinders without linear bearings

Stroke

Bore (mm)	Standard Stroke (mm)	Max. Stroke (mm)
6	5 10 15 20	20
10	5 10 15 20 25 30	30
12	10 20 25 30 40 50 60 70 75 80 90 100 125 150	150
16	10 20 25 30 40 50 60 70 75 80 90 100 125 150 175 200	200
20/25	20 25 30 40 50 60 70 75 80 90 100 125 150 175 200 225 250	250
32~63	25 30 40 50 60 70 75 80 90 100 125 150 175 200 225 250	250

Note: the middle non-standard stroke is made by adding a pad in the cylinder of standard stroke; The Ø12~Ø32 cylinder diameter corresponds to every 1mm stroke, and the Ø40~Ø63 cylinder diameter corresponds to every 5mm stroke;

For example, order SGL20*47 non-standard travel cylinder, it is made from SGL20*50 standard travel cylinder with 3mm gasket, its external size,installation size and SGL20*50 the same

Optional Accessories

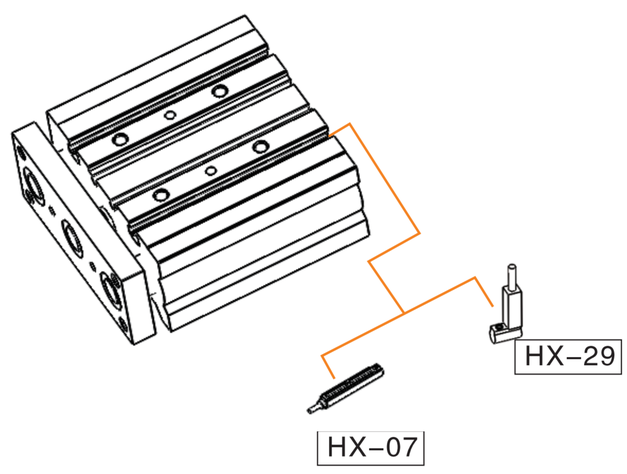

How to Mount ?

Fixation of screw on top surface

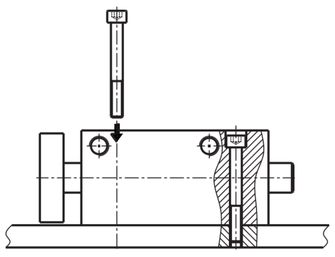

Fixation of screw at bottom surface

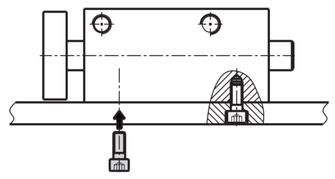

Fixation of screw at back surface

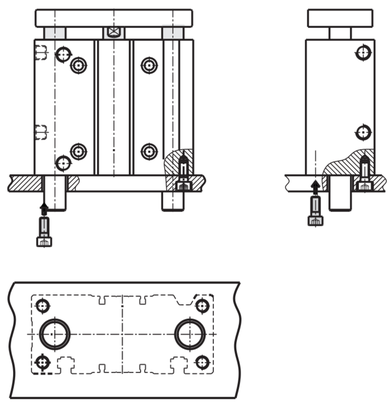

Fixation of T slot at bottom

Allowable load and torque

Inside diameter	Formality	stroke																			
		5	10	15	20	25	30	40	50	60	70	75	80	90	100	125	150	175	200	225	250
Maximum permissible lateral load																					Unit (N)

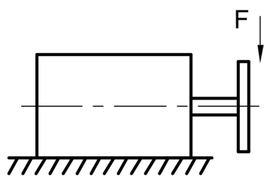

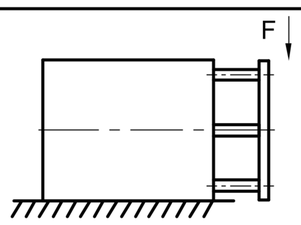

6	SGM	0.4	0.3	0.18	0.07	-	-	-	-	-	-	-	-	-	-	-	-	-	-	-	-
10	SGM	1.5	1.2	0.8	0.5	0.25	0.1	-	-	-	-	-	-	-	-	-	-	-	-	-	-
12	SGM	-	3	-	3	3	3	3	3	3	3	3	3	3	3	2	2	-	-	-	-
	SGL	-	2	-	2	2	2	2	2	2	1	1	1	1	1	1	1	-	-	-	-
16	SGM	-	7	-	7	7	7	7	7	7	7	7	7	6	6	6	6	5	5	-	-
	SGL	-	4	-	4	4	4	4	4	4	3	3	3	3	3	3	3	3	2	-	-
20	SGM	-	-	-	14	14	14	13	12	12	12	12	12	12	12	11	10	10	9	8	7
	SGL	-	-	-	7	7	7	7	6	6	6	6	6	6	6	5	5	5	5	4	4
25	SGM	-	-	-	20	20	20	18	16	19	19	19	19	19	19	18	17	16	15	14	13
	SGL	-	-	-	10	10	10	9	8	10	10	10	10	10	9	9	8	8	7	7	7
32	SGM	-	-	-	-	37	37	37	36	35	35	34	34	34	33	33	31	29	27	26	24
	SGL	-	-	-	-	19	19	19	18	17	17	17	17	17	17	16	15	15	14	13	12
40	SGM	-	-	-	-	37	37	37	36	35	35	34	34	34	33	33	31	29	27	26	24
	SGL	-	-	-	-	19	19	19	18	17	17	17	17	17	17	16	15	15	14	13	12
50	SGM	-	-	-	-	140	130	120	105	165	160	155	155	150	145	130	115	100	80	70	60
	SGL	-	-	-	-	70	65	60	50	80	80	75	75	75	70	65	55	50	40	35	30
63	SGM	-	-	-	-	140	130	120	105	165	160	155	155	150	145	130	115	100	80	70	60
	SGL	-	-	-	-	70	65	60	50	80	80	75	75	75	70	65	55	50	40	35	30
80	SGM	-	-	-	-	220	210	200	190	180	220	210	205	195	185	165	155	135	120	105	80
	SGL	-	-	-	-	110	105	100	95	90	110	105	100	100	95	85	80	70	60	55	40
100	SGM	-	-	-	-	280	265	250	235	220	280	270	260	250	240	230	210	180	160	140	120
	SGL	-	-	-	-	140	130	125	120	110	140	135	130	125	120	115	105	90	80	70	60

Maximum permissible torque — Unit (N)

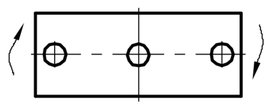

6	SGM	0.008	0.007	0.006	0.005	-	-	-	-	-	-	-	-	-	-	-	-	-	-	-	-
10	SGM	0.045	0.039	0.033	0.028	0.024	0.021	-	-	-	-	-	-	-	-	-	-	-	-	-	-
12	SGM	-	0.90	-	0.79	0.71	0.65	0.77	0.72	0.65	0.53	0.50	0.47	0.41	0.36	0.31	0.27	-	-	-	-
	SGL	-	0.61	-	0.45	0.40	0.35	0.58	0.50	0.44	0.39	0.37	0.35	0.32	0.29	0.24	0.20	-	-	-	-
16	SGM	-	1.21	-	1.04	0.94	0.88	1.23	1.11	0.99	0.72	0.69	0.65	0.61	0.58	0.50	0.44	0.40	0.36	-	-
	SGL	-	0.99	-	0.74	0.66	0.59	0.99	0.86	0.77	0.69	0.65	0.61	0.57	0.52	0.43	0.37	0.32	0.28	-	-
20	SGM	-	-	-	1.57	1.42	1.31	2.39	2.15	1.97	1.90	1.88	1.86	1.72	1.63	1.44	1.28	1.16	1.06	1.01	0.90
	SGL	-	-	-	1.26	1.14	1.03	2.17	1.94	1.79	1.59	1.52	1.46	1.33	1.25	1.34	1.17	1.03	0.93	0.88	0.76
25	SGM	-	-	-	2.40	2.22	2.01	3.66	3.35	3.17	3.06	2.96	2.91	2.77	2.57	2.26	2.02	1.83	1.67	1.57	1.42
	SGL	-	-	-	2.11	1.96	1.75	3.37	3.02	2.71	2.42	2.38	2.33	2.19	1.97	2.05	1.78	1.58	1.41	1.22	1.16
32	SGM	-	-	-	-	6.35	6.00	5.73	5.13	5.98	5.74	5.69	5.62	5.11	4.97	4.42	3.98	3.61	3.31	2.97	2.84
	SGL	-	-	-	-	5.95	5.73	5.44	4.89	5.43	5.15	5.11	5.02	4.70	4.51	6.34	5.79	5.33	4.93	4.33	4.29
40	SGM	-	-	-	-	7.00	6.60	6.11	5.66	6.66	6.31	6.27	6.23	5.86	5.48	4.78	4.38	3.98	3.65	3.34	3.13
	SGL	-	-	-	-	6.55	6.21	5.77	5.39	6.17	5.67	5.62	5.58	5.33	4.96	6.98	6.38	5.87	5.43	5.00	4.72
50	SGM	-	-	-	-	13.00	12.60	11.00	10.80	13.70	12.70	12.00	11.80	11.10	10.80	9.50	8.60	7.86	7.24	6.80	6.24
	SGL	-	-	-	-	9.17	8.75	8.30	7.62	10.30	9.94	9.83	9.77	8.82	8.74	11.60	10.70	9.83	9.12	8.95	7.95
63	SGM	-	-	-	-	14.70	13.60	12.90	12.10	19.40	16.20	13.50	12.70	12.10	11.90	10.70	9.69	8.86	8.16	7.52	7.04
	SGL	-	-	-	-	10.20	9.74	9.20	8.48	17.50	14.00	11.00	10.60	10.20	9.74	13.00	11.90	11.00	10.20	9.63	8.84
80	SGM	-	-	-	-	21.9	20.8	19.7	18.6	15.8	24	22.9	21.7	21	20.5	18.6	17	15.6	14.5	13.5	12.6
	SGL	-	-	-	-	15.1	14.3	13.6	12.9	12.2	23.8	22.7	21.6	21	20.6	18.9	17.3	16	14.8	13.5	12.9
100	SGM	-	-	-	-	38.8	36.8	35.0	33.5	28.5	39.4	37.5	35.6	34.5	33.8	30.9	28.4	26.2	24.4	22.5	21.4
	SGL	-	-	-	-	27.1	25.7	24.4	30.6	26	39.8	37.9	36	35.2	34.6	31.8	29.3	27.2	25.3	23.5	22.1

Internal Structure

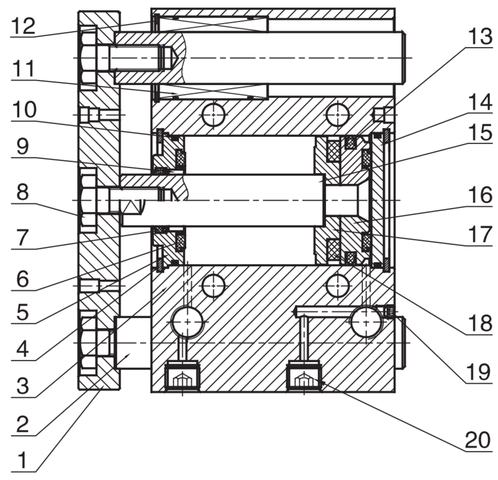

No.	Part Name	Material
1	Fixing plate	Aluminum alloy
2	Leader	Steel
3	Barrel	Aluminum alloy
4	C type retainer ring	Spring steel
5	Head cover	Aluminum alloy
6	Anti–bump cushion	NBR/TPU
7	Piston rod seal	TPU
8	Screw	Stainless steel
9	Self lubricating bearing	Bronze powder
10	O–ring	NBR
11	Linear bearing(SGL) Slide bearing (SGM)	Brass(SGM) Composite material(SGL)
12	C type retainer ring	Spring steel
13	Piston seal	NBR
14	Rear cover	Aluminum alloy
15	Piston rod	S45C hard chrome carbon steel
16	Piston	Aluminum alloy
17	Magnet base	Aluminum alloy
18	Magnet	Plastic
19	Nut	Carbon steel
20	Hex fix screw(G)	Carbon steel
21	Spacer	Aluminum alloy

SGL Series

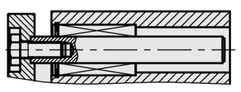

Bore Φ12~Φ25 Bore Φ32~Φ63
Stroke≤30mm Stroke≤50mm

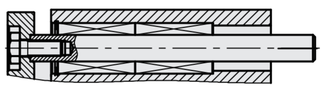

Bore Φ12~Φ25 Bore Φ32~Φ63
30<Stroke≤100mm 50<Stroke≤100mm

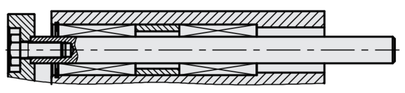

Bore Φ12 Bore Φ16~Φ63
50<Stroke≤150mm 100<Stroke≤200mm

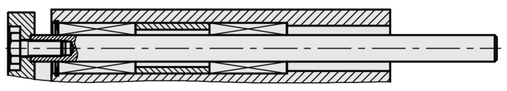

Bore Φ20~Φ63
Stroke>200mm

SGM Series

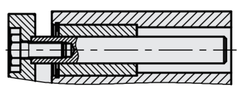

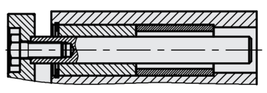

Bore Φ12~Φ25 Bore Φ32~Φ63 Bore Φ12~Φ25
Stroke≤30mm Stroke≤50mm 30<Stroke≤50mm

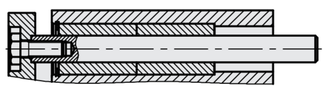

Bore Φ12~Φ63
50<Stroke≤100mm

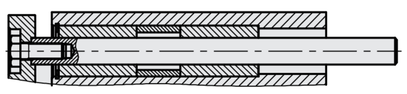

Bore Φ12 Bore Φ16~Φ63
100<Stroke≤150mm 100<Stroke≤200mm

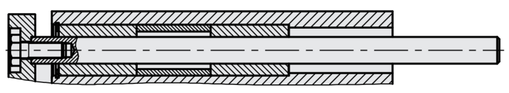

Bore Φ12~Φ63
Stroke>200mm

Main Dimension

SGM6S

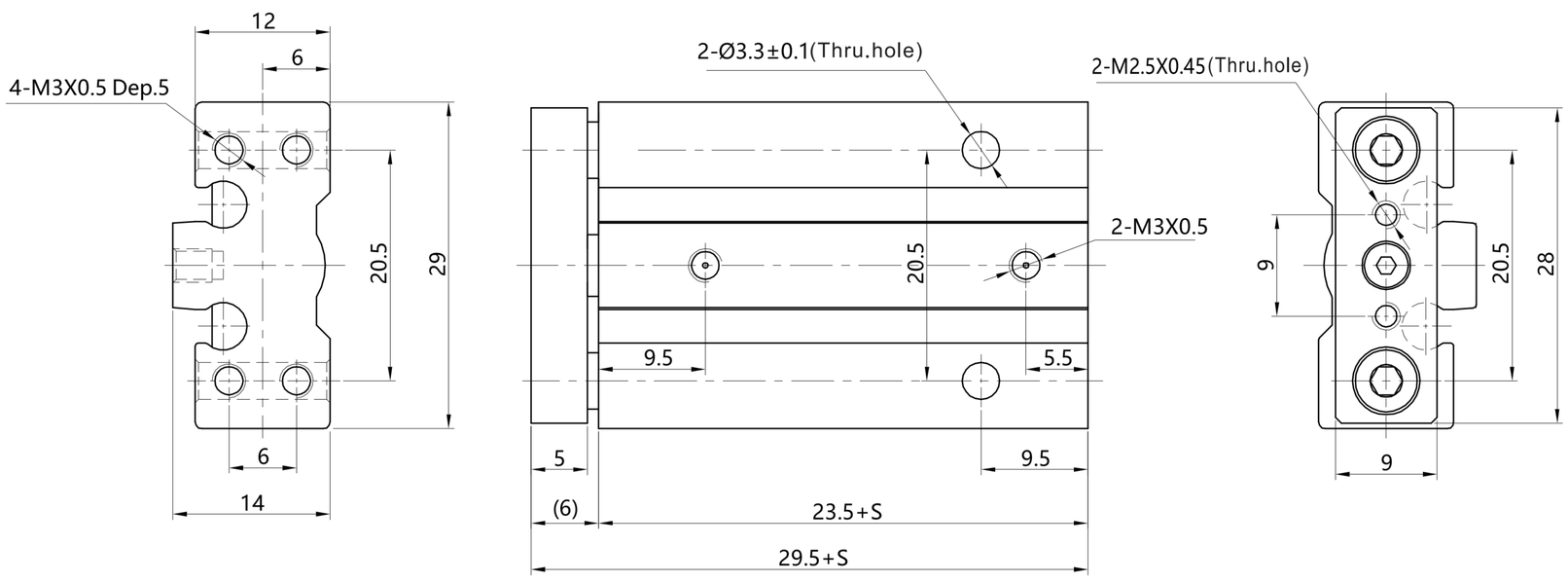

SGM10S

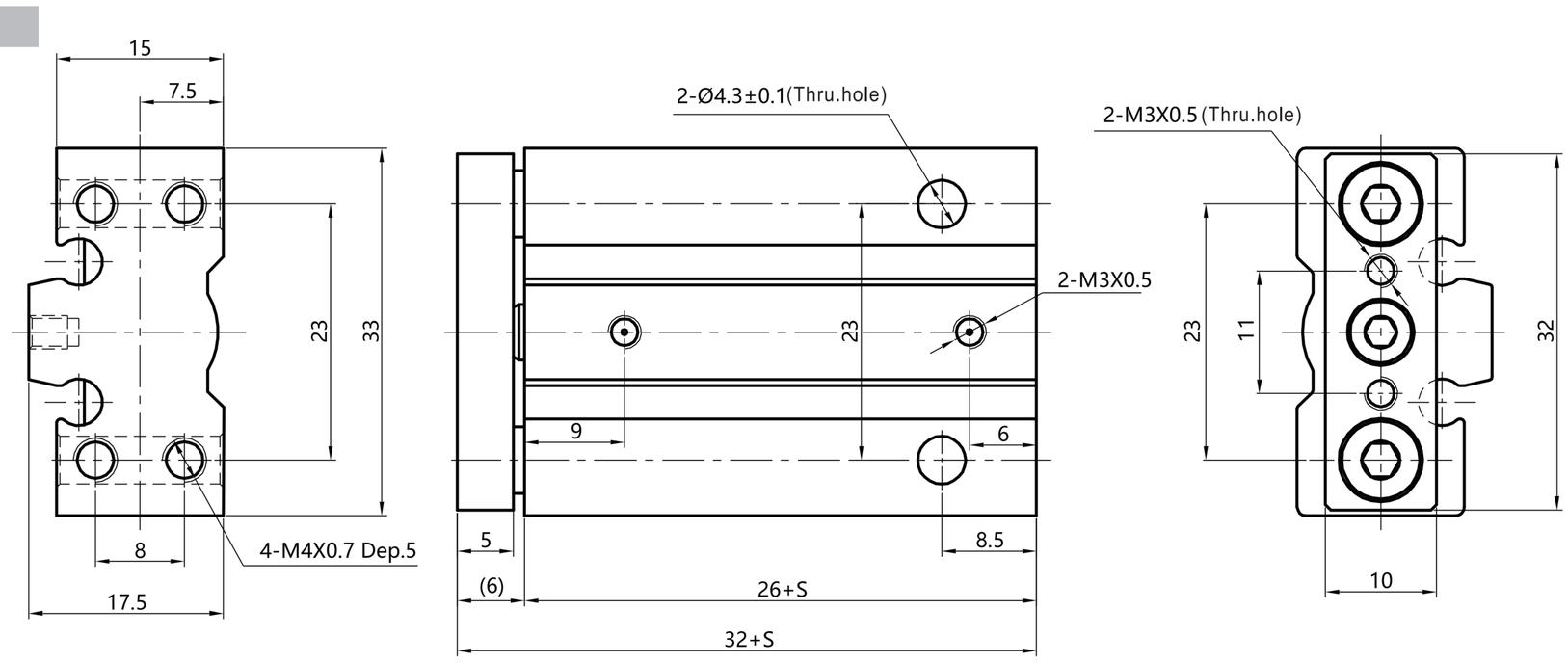

E·MC®

Main Dimension

SG12~63

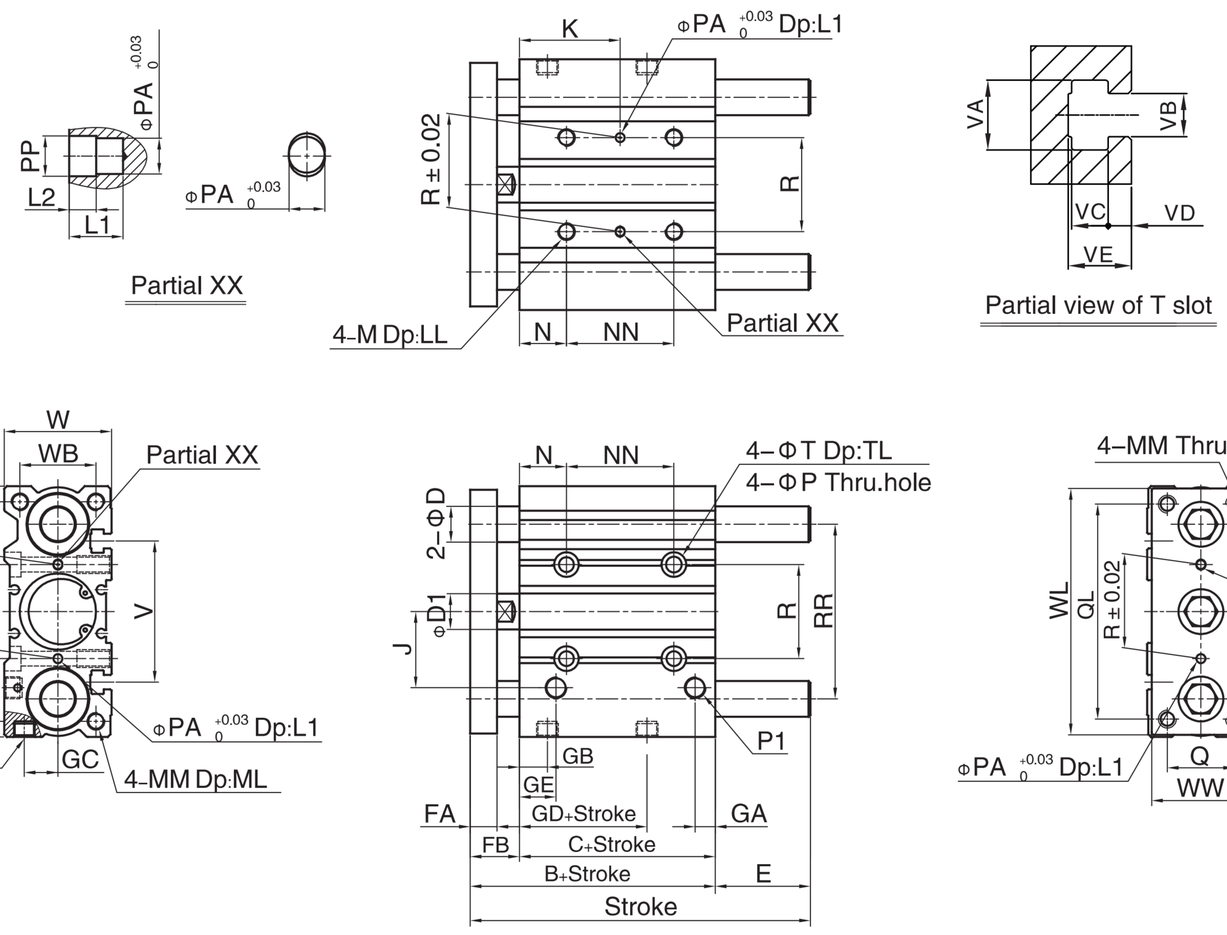

(mm)

Bore\Sign	E(SGL)				E(SGM)				NN				K			
	≤30	31~100	101~200	>200	≤50	51~100	101~200	>200	≤30	31~100	101~200	>200	≤30	31~100	101~200	>200
12	0	13	43	–	0	13	43	–	20	40	110	–	15	25	60	–
16	0	19	49	–	0	19	49	–	24	44	110	–	17	27	60	–
20	0	27	51	69	0	27	51	69	24	44	120	200	29	39	77	117
25	0	28.5	51	68.5	0	28.5	51	68.5	24	44	120	200	29	39	77	117
Bore\Sign	≤50	51~100	101~200	>200	≤50	51~100	101~200	>200	≤40	41~100	101~200	>200	≤40	41~100	101~200	>200
32	5.5	42.5	58.5	80.5	5.5	42.5	58.5	80.5	24	48	124	200	33	45	83	121
40	0	36	52	74	0	36	52	74	24	48	124	200	34	46	84	122
50	4	46	62	89	4	46	62	89	24	48	124	200	36	48	86	124
63	0	41	57	84	0	41	57	84	28	52	128	200	38	50	88	124

Bore\Sign	B	C	FA	FB	P1	GA	GB	GC	GD	GE	R	RR	N	P	PA	PP	T	TL	M	LL	D1
12	42	29	8	13	M5X0.8	7.5	11	8	13	11	23	41	5	4.2	3	3.5	8	4.5	M5X0.8	10	6
16	46	33	8	13	M5X0.8	8	11	10	15	11	24	46	5	4.2	3	3.5	8	4.5	M5X0.8	10	8
20	53	37	10	16	1/8"	9	10.5	10.5	12.5	10.5	28	54	17	5.2	3	3.5	9.5	5.5	M6X1.0	12	10
25	53.5	37.5	10	16	1/8"	9	11.5	13.5	12.5	11.5	34	64	17	5.2	4	4.5	9.5	5.5	M6X1.0	12	12
32	59.5	37.5	12	22	1/8"	9	12.5	15	7	12.5	42	78	21	6.9	4	4.5	11	7.5	M8X1.25	16	16
40	66	44	12	22	1/8"	10	14	18	13	14	50	86	22	6.9	4	4.5	11	7.5	M8X1.25	16	16
50	72	44	16	28	1/4"	11	12	21.5	9	14	66	110	24	8.7	5	6	14	9	M10X1.5	20	20
63	77	49	16	28	1/4"	13.5	16.5	28	14	16.5	80	124	24	8.7	5	6	14	9	M10X1.5	20	20

Bore\Sign	D(SGL)	D(SGM)	J	W	WA	WB	WL	WW	H	Q	QL	MM	ML	L1	L2	V	VA	VB	VC	VD	VE
12	6	8	18	26	50	18	56	22	58	14	48	M4X0.7	10	6	3	37	7.4	4.4	3.7	2	6.2
16	8	10	19	30	56	22	62	25	64	16	54	M5X0.8	12	6	3	38	7.4	4.4	3.7	2.5	6.7
20	10	12	25	36	72	24	81	30	83	18	70	M5X0.8	13	6	3	44	8.4	5.4	4.5	2.8	7.8
25	12	16	28.5	42	82	30	91	38	93	26	78	M6X1.0	15	6	3	50	8.4	5.4	4.5	3	8.2
32	16	20	34	48	98	34	110	44	112	30	96	M8X1.25	20	6	3	63	10.5	6.5	5.5	3.5	9.5
40	16	20	38	54	106	40	118	44	120	30	104	M8X1.25	20	6	3	72	10.5	6.5	5.5	4	11
50	20	25	47	64	130	46	146	60	148	40	130	M10X1.5	22	8	4	92	13.5	8.5	7.5	4.5	13.5
63	20	25	55	78	142	58	158	70	162	50	130	M10X1.5	22	8	4	110	17.8	11	10	7	18.5

Main Dimension

E04–SGJ

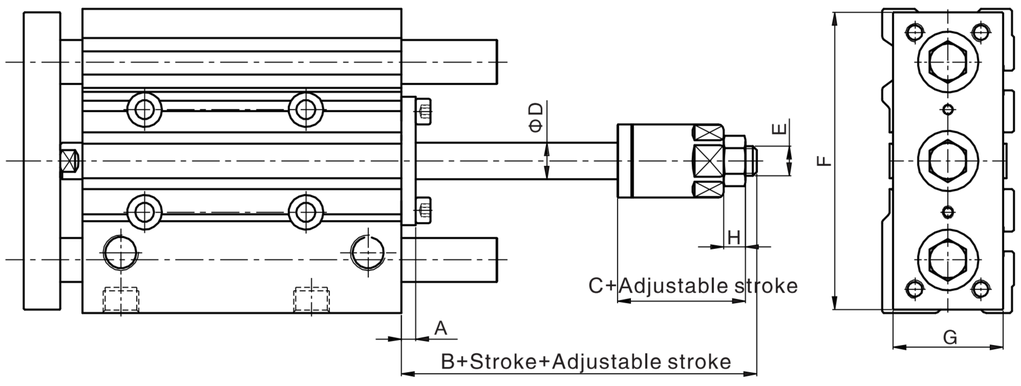

Bore\Sign	A	B	C	D	E	F	G	H
12	3	20	17	6	M5X0.5	56	22	4
16	3	24	21	8	M6X1.0	62	25	5
20	4	29	25	10	M8X1.25	81	30	6
25	5	32	29	12	M10X1.25	91	38	6
32	6	35	29	16	M14X1.5	110	44	8
40	6	35	29	16	M14X1.5	118	44	8
50	8	40	32	20	M18X1.5	146	60	11
63	8	40	32	20	M18X1.5	158	70	11