AER/BER
Regulator

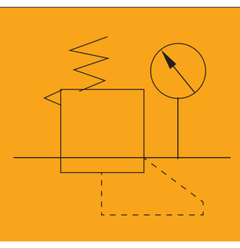

How to Order?

Series No.	Type Code	Body Size	Pressure Gauge Code	Bracket Code	—	Scale Unit	—	Thread Type
AE: Small body size without bowl guard BE: Larger body size with bowl guard	R: Regulator	1500: 1/8" 2000: 1/4" 2000: 1/4" 3000: 3/8" 4000: 1/2"	Blank: With pressure gauge N: No pressure gauge	Blank: With bracket J: No bracket		4: Mpa/Psi(Default) 5: Bar/Psi		Blank: G P: PT T: NPT

Order Example:

AE series Regulator, 1/4" body size, Mpa/Psi pressure scale unit, PT thread, ERP code is: AEC2000–4–P

Main Dimension

AER1500/2000

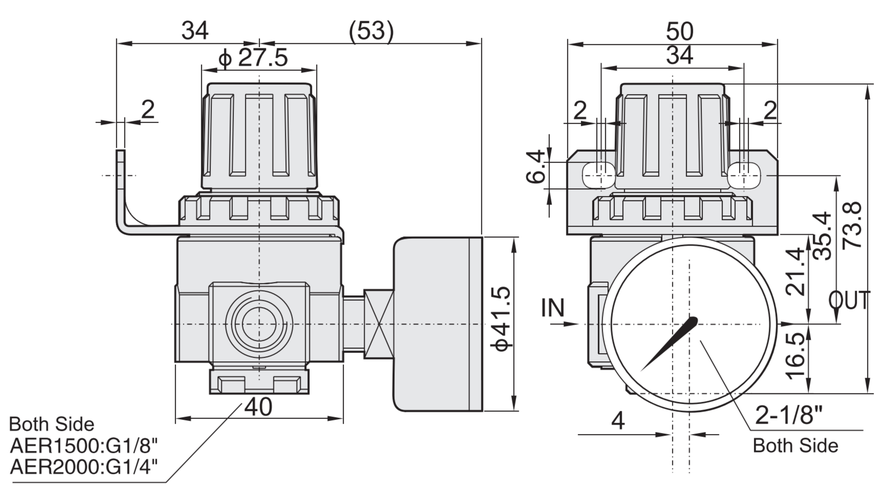

BER2000–4000

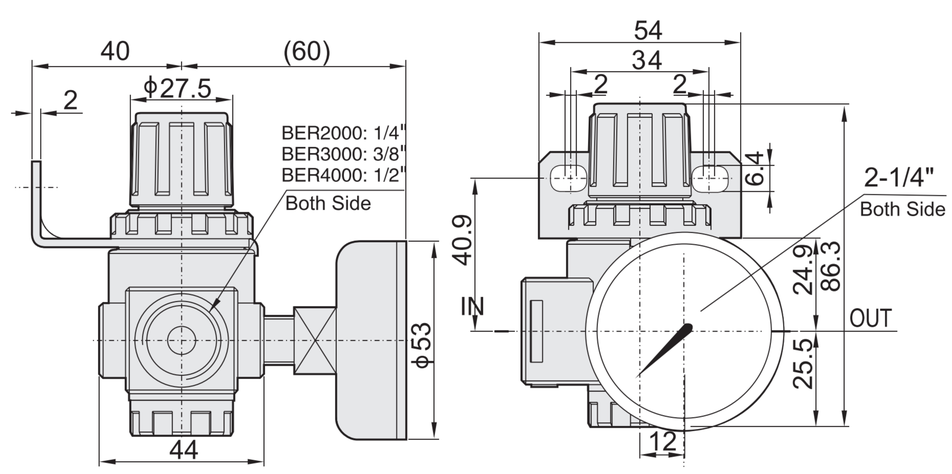

Specifications

Model	AER1500	AER2000	BER2000	BER3000	BER4000
Working medium	Air				
Port size	G1/8	G1/4	G1/4	G3/8	G1/2
Adjusting pressure range (MPa)	0.05~0.85				
Max. adjusting pressure (MPa)	1.0				
Guaranteed pressure (MPa)	1.5				
Working temperature(°C)	5~60				
Weight (g)	200		230		