E·MC®

◎How to Order?

Series No.	–	Thread Size	×	Thread Length	Accessory Code
FJ: Accessory		M6: M6 M20: M20 M8: M8 M27: M27 M10: M10 M36: M36 M12: M12 M42: M42 M16: M16 M48: M48		1: 1 1.25: 1.25 1.5: 1.5 2: 2	IJ: I fitting YJ: Y fitting(PIN) YCJ: Y fitting(PIN+CLIP) FD: Floating fitting BJ: Bearing fitting

◎ Dimensions of Cylinder Accessory

◎Y Fitting

Model/Sign	NA	NB	NC	ND	NE	NH	NM	NP	NQ	Material
FJ–M6X1YJ	10	12	6	24	–	M6X1	6	12	31	Carbon steel
FJ–M8X1.25YJ	14	16	8	32	–	M8X1.25	8	16	42	Carbon steel
FJ–M10X1.25YJ	18	20	10	40	–	M10X1.25	10	20	52	Carbon steel
FJ–M12X1.25YJ	20	24	12	48	–	M12X1.25	12	24	62	Carbon steel
FJ–M16X1.5YJ	26	32	16	64	–	M16X1.5	16	32	83	Carbon steel
FJ–M20X1.5YJ	34	40	20	80	–	M20X1.5	20	40	105	Carbon steel
FJ–M27X2YJ	42	55	30	110	–	M27X2	30	55	148	Carbon steel
FJ–M36X2YJ	60	70	35	144	–	M36X2	35	72	188	Carbon steel
FJ–M42X2YJ	70	85	40	168	–	M42X2	40	84	232	Carbon steel
FJ–M48X2YJ	80	90	50	192	–	M48X2	50	96	265	Carbon steel
FJ–M12X1.25YJ–TBC	21	25	12	48	23	M12X1.25	12	22	60	Carbon steel
FJ–M16X1.5YJ–TBC	28	32	16	62	30	M16X1.5	16	30	78	Cast Steel
FJ–M20X1.5YJ–TBC	36	40	20	79	38	M20X1.5	20	39	90	Cast Steel

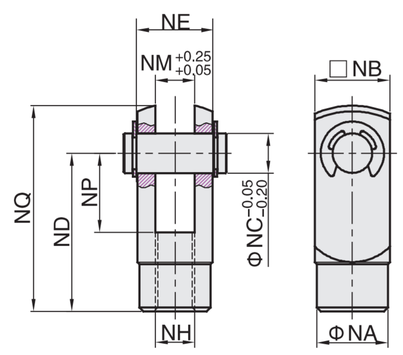

◎YC Fitting

Model/Sign	NA	NB	NC	ND	NH	NM	NP	NQ	Material
FJ–M6X1YCJ	10	12	6	24	M6X1	6	12	31	Carbon steel
FJ–M8X1.25YCJ	14	16	8	32	M8X1.25	8	16	42	Carbon steel
FJ–M10X1.25YCJ	18	20	10	40	M10X1.25	10	20	52	Carbon steel
FJ–M12X1.25YCJ	20	24	12	48	M12X1.25	12	24	62	Carbon steel
FJ–M16X1.5YCJ	26	32	16	64	M16X1.5	16	32	83	Carbon steel
FJ–M20X1.5YCJ	34	40	20	80	M20X1.5	20	40	105	Carbon steel
FJ–M27X2YCJ	42	55	30	110	M27X2	30	55	148	Carbon steel

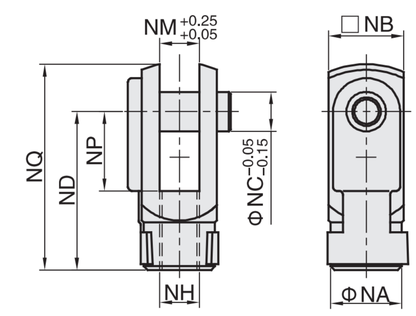

◎I Fitting

Model/Sign	NA	NC	ND	NE	NF	NG	NH	NM	Material
FJ–M6X1IJ	12	6	24	31	12	10	M6X1	6	Carbon steel
FJ–M8X1.25IJ	16	8	30	40	11	15	M8X1.25	8	Carbon steel
FJ–M10X1.25IJ	20	10	40	52	15	20	M10X1.25	10	Carbon steel
FJ–M12X1.25IJ	24	12	48	67	24	20	M12X1.25	12	Carbon steel
FJ–M16X1.5IJ	32	16	64	89	32	23	M16X1.5	16	Carbon steel
FJ–M20X1.5IJ	40	20	80	112	40	30	M20X1.5	20	Carbon steel
FJ–M27X2IJ	55	30	110	155	50	55	M27X2	30	Carbon steel
FJ–M12X1.25IJ–TBC	23.5	12	48	60	24	20	M12X1.25	12	Carbon steel
FJ–M16X1.5IJ–TBC	28.5	16	62.5	78.5	31.5	25	M16X1.5	16	Carbon steel
FJ–M20X1.5IJ–TBC	38	20	81	100	37.5	30	M20X1.5	20	Carbon steel

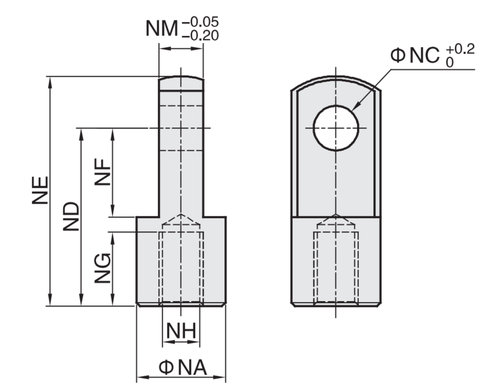

◎Floating Fitting

Model/Sign	MA	MB	MC	MD	ME	MF	MG	MH	MI/MJ	MK
FJ–M3X0.5FD	23.5	7.5	3	15	12.8	5.5	2.4	4	M3X0.5	5.5	13	5
FJ–M4X0.7FD	26	9.5	3	17	12.8	6	3	4	M4X0.7	7	13	5
FJ–M5X0.8FD	34.5	13.5	3.5	22.8	13.8	8	4	6	M5X0.8	8	14	5
FJ–M6X1.0FD	34.5	13.5	3.5	22.8	13.8	8	4	6	M6X1.0	10	14	5

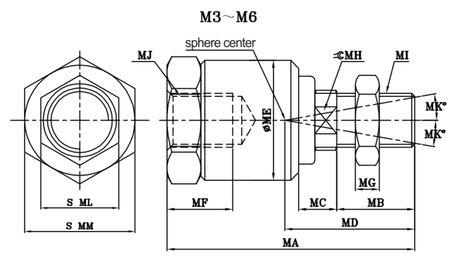

Model/Sign	MA	MB	MC	MD	ME	MF	MG	MH	MI/MJ	MK
FJ–M8X1.25FD	51	20	6	17	24	10.5	6	8	M8X1.25	13
FJ–M10X1.25FD	58	22	7	21	26	11	6	10	M10X1.25	12
FJ–M12X1.25FD	58	22	8	21	28	11.5	7	12	M12X1.25	12
FJ–M14X1.5FD	70	22.5	8.5	28	34.5	16	8	15	M14X1.5	12
FJ–M16X1.5FD	90	27	10	41	44.5	19	8	17	M16X1.5	7
FJ–M18X1.5FD	92	27	10	41	44.5	21	11	18	M18X1.5	7
FJ–M20X1.5FD	102	29	13	46	53	22	10	22	M20X1.5	10
FJ–M22X1.5FD	108	32	13	46	53	25	13	22	M22X1.5	5
FJ–M26X1.5FD	120	32	14.5	52.5	59.5	25	13	27	M26X1.5	5
FJ–M27X2.0FD	136.5	40	14.5	52.5	59.5	40	13.5	27	M27X2.0	5
FJ–M36X2.0FD	194.5	60	20.5	77.5	84	54	18	36	M36X2.0	5

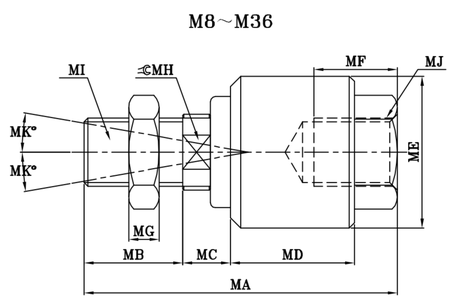

◎Bearing Fitting
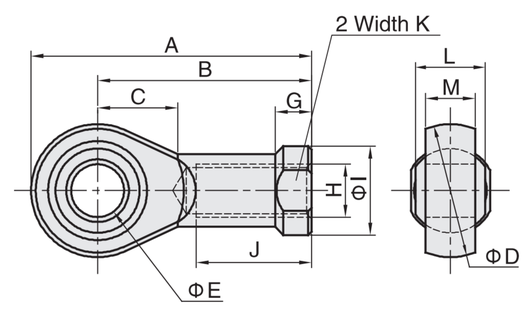
Model/Sign	A	B	C	D	E	G	H	I	J	K	L	M
FJ–M6X1BJ	40.5	31	11	20	6	7	M6X1	13	18	11	9	7
FJ–M8X1.25BJ	48	36	12	24	8	7.5	M8X1.25	16	20	14	12	9
FJ–M10X1.25BJ	57.5	44	15.5	28	10	8	M10X1.25	19	25	17	14	10.5
FJ–M12X1.25BJ	66.5	51.5	17	32	12	9.5	M12X1.25	22	25	19	16	12
FJ–M16X1.5BJ	85	65	25	40	16	11	M16X1.5	27	35	24	21	15
FJ–M20X1.5BJ	102	77	30	50	20	12.5	M20X1.5	34	40	30	25	18
FJ–M27X2BJ	145	109	40.5	70	30	18.5	M27X2	50	60	43	37	25
FJ–M36X2BJ	168	127.5	39.5	80	35	19	M36X2	57	70	49.5	43	28.5