EIR
Regulator

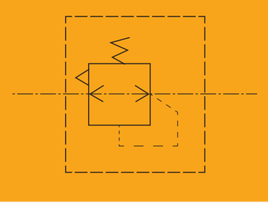

◎ Specifications

Model	EIR2000	EIR3000	EIR4000	EIR5000
Proof pressure(MPa)	1.5			
Max. working pressure(MPa)	1.0			
Pressure adjusting range(MPa)	0.05~0.9			
Working temperature(℃)	–5~60			
Valve type	With overflow			

Model	Specifications	
	* Rated flow (L/min)	* Port Size (G)
EIR2000–01	1178	1/8
EIR2000–02	1200	1/4
EIR3000–02	2112	1/4
EIR3000–03	2212	3/8
EIR4000–04	5312	1/2
EIR5000–06	6400	3/4
EIR5000–10	6600	1

* The above information is based on 8.0 Bar supply pressure and 6.3 Bar set pressure * NPT,PT port size is optional

◎ Main Dimension

EIR2000

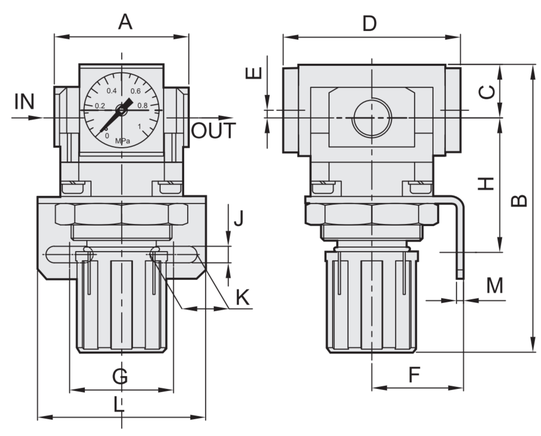

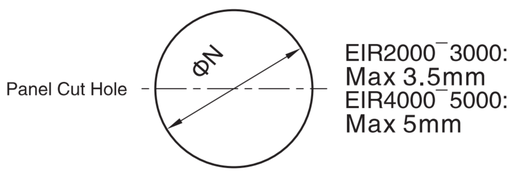

EIR3000–EIR4000

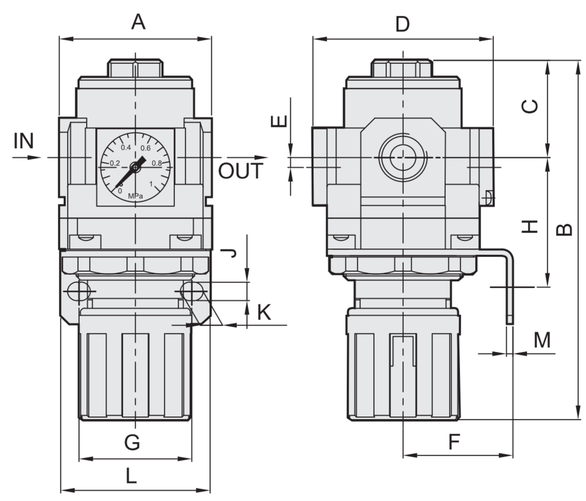

EIR5000

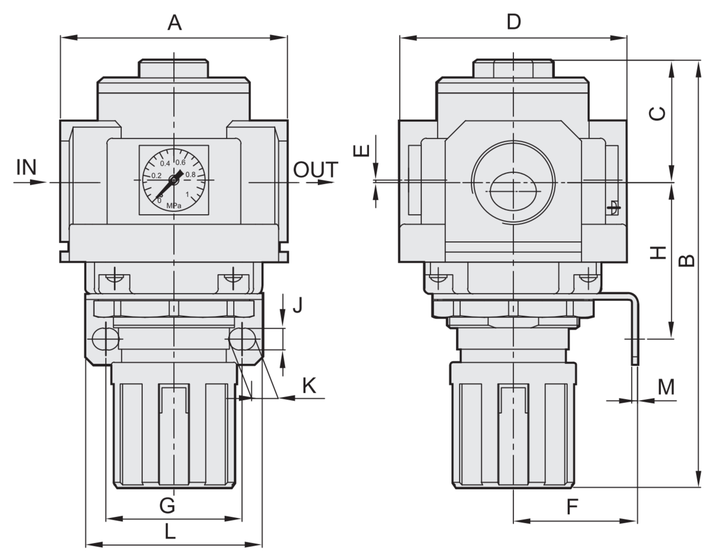

Model	Port Size (G)	A	B	C	D	E	F	G	H	J	K	L	M	N
EIR2000	1/8"–1/4"	40	95	17	55	1.3	30.5	33.5	44	5.4	15	55	2	33
EIR3000	1/4"–3/8"	53	127.5	34.5	64	3	39	40	46	6.5	8	53	2	42
EIR4000	1/2"	70	149.5	37.5	81	4	48	53.5	54.5	8.5	10.5	70	2	52
EIR5000	3/4"–1"	90	168	49	90	0.5	48	53.5	62	8.5	10.5	70	2	52