EC

F.R.L

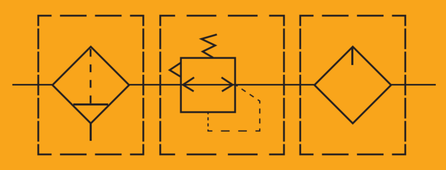

Specifications

Model	EC1000	EC2000	EC2500	EC3000	EC4000	EC5000
Proof pressure(MPa)	1.5					
Max. working pressure(MPa)	1.0					
Working temperature(℃)	–5~60 (No freezing)					
Filter precision	25μm(5 μm is optional)					
Recommended oil	Turbine No.1 Oil ISOVG32					
Bowl material	Polycarbonate					
Bowl guard	None		Available			
Pressure adjusting range(MPa)	0.15~0.85					
Valve type	With overflow					

Model	Specifications							Accessories
	Assembly			* Rated flow (L/min)	** Port size (G)	Pressure gauge thread size (G)	Weight (kg)	Bracket(Two)
	Filter	Regulator	Lubricator					
EC1000–M5	EF1000	ER1000	EL1000	90	M5	1/16	0.26	Y10L
EC2000–01	EF2000	ER2000	EL2000	1000	1/8	1/8	0.74	Y20L
EC2000–02				1100	1/4			
EC3000–02	EF3000	ER3000	EL3000	1950	1/4	1/8	1.18	Y30L
EC3000–03				2105	3/8			
EC4000–03	EF4000	ER4000	EL4000	4950	3/8	1/4	2.14	Y40L
EC4000–04				5200	1/2			
EC4000–06	EF4000–06	ER4000–06	EL4000–06	5600	3/4	1/4	2.47	Y50L
EC5000–06	EF5000	ER5000	EL5000	6200	3/4	1/4	3.82	Y60L
EC5000–10				6500	1			

* The above information is based on 8.0 Bar supply pressure and 6.3 Bar set pressure

* NPT,PT port size is optional

Main Dimension

EC1000–EC2000

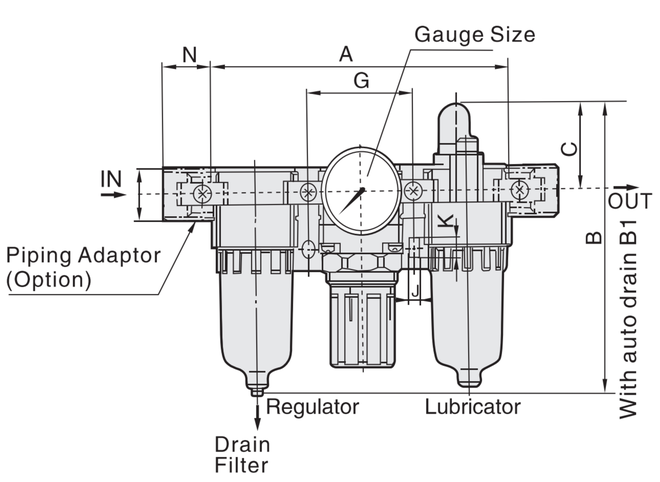

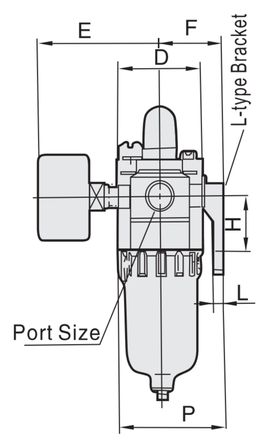

EC3000–EC5000

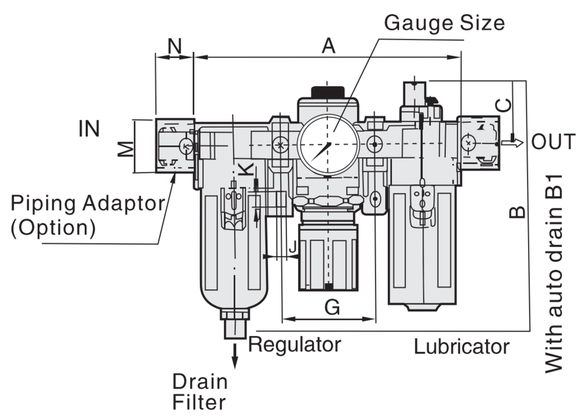

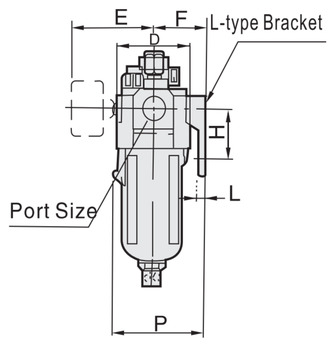

Model	Port Size (G)	A	B	B1	C	D	E	F	G	H	J	K	L	M	N	P
EC1000	M5	91	84.5	–	25.5	25	26	25	33	20	4.5	7.5	5	17.5	16	38.5
EC2000	1/8"–1/4"	140	123.5	161	37.5	40	53	30	50	24	5.5	8.5	5	22	23	50
EC3000	1/4"–3/8"	181	157.5	170	39	53	57	41	64	35	7.5	11	7.2	34.2	26	70.5
EC4000	3/8"–1/2"	238	190	194	40	70	62	50	84	40	9	13	7.2	42.2	33	88
EC4000–06	3/4"	253	191.5	194.5	39	70	66	50	89	40	9	13	7.2	46.2	36	88
EC5000	3/4"–1"	300	271.5	274.5	45.5	90	72	69.8	105	50	12	16	10.5	55.2	40	115