EXS
Double Shaft Cylinder

EXS: Dual–axis double–action type (with magnet and cushion buffer)

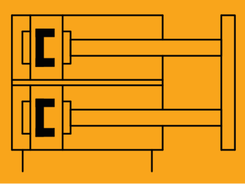

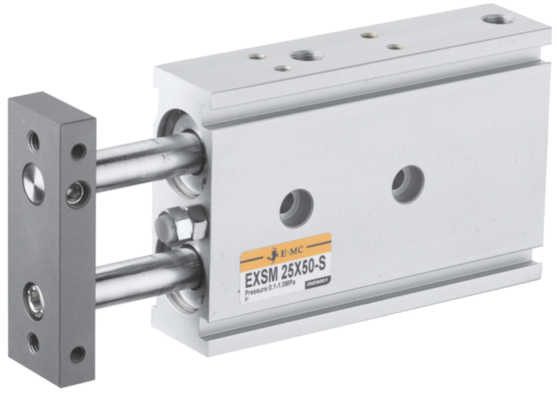

Specifications

Bore(mm)	6	10	16	20	25	32
Acting type	Double acting					
Working Medium	Clean Air(after 40 μ m filtration)					
Working Pressure (MPa)	0.1~1.0					
Guaranteed Pressure (MPa)	1.5					
Working Temperature (℃)	–20~70(No freezing)					
Speed range (mm/s)	30~500					
Cushion type	Rubber cushion					
Stroke tolerance(mm)	$^{+1.0}_{0}$					
Adjustable stroke(mm)	–5~0					
No–rotating precision	± 0.2°	± 0.15°			± 0.1°	
Port Size	M5 × 0.8				G1/8❶	

❶ PT、NPT port size is optional.

How to Order?

Series No	Type No	Bore	X	Stroke	–	Magnet No	–	Thread Type
EXS	M: Slide bearing	6 10 12 16 20 …		25 50 75 …		S : With magnet		Blank: G P : PT T : NPT

Order Example:

EXS series, Slide Bearing type, Bore 6mm, stroke 30mm ERP code is: EXSM6X30–S

Note: The cylinder's bore and stroke, mounting accessories details according to drawings.

Optional Accessories

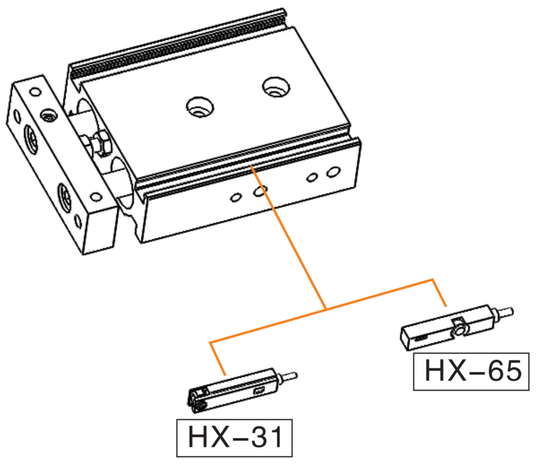

Stroke

Bore (mm)	Standard Stroke (mm)	Max. Stroke (mm)
6	10 20 30 40 50	50
10	10 20 25 30 40 50 60 70 75 80 90 100	100
16~32	10 20 25 30 40 50 60 70 75 80 90 100 125 150 175 200	200

Note:The dimensions of non–std stroke cylinder has the same dimensions as the next longer stroke std. stroke cylinder.
e.g. 27mm stroke cylinder has the same dimensions of 30 std. stroke cylinder.

Internal Structure

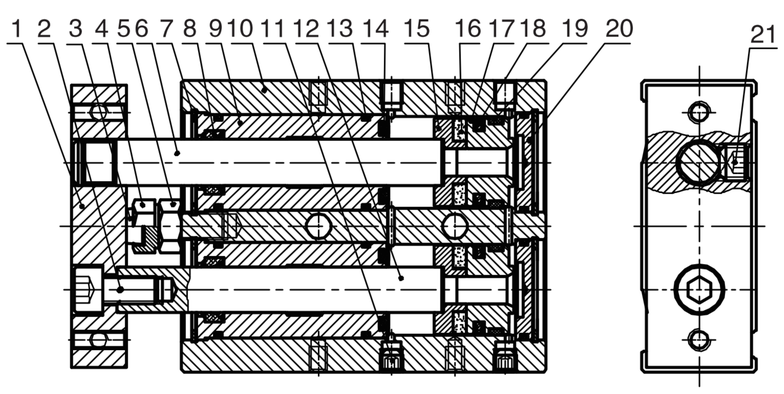

No.	Part Name	Material
1	Fixing plate	Aluminum alloy
2	Nut	Carbon steel
3	Bumper	POM
4	Adjustable nut	Carbon steel
5	Screw	Carbon steel
6	Piston rod	S45C hard chrome carbon steel
7	C clip	Carbon steel
8	Wiper seal	NBR
9	Head cover	Aluminum alloy
10	Body	Aluminum alloy
11	Hex fix screw	Cu
12	Piston rod	S45C hard chrome carbon steel
13	O–ring	NBR
14	Anti–bump cushion	TPU(EN10 is POM)
15	Magnet holder	Aluminum alloy
16	Magnet	NdFeB
17	Piston	Aluminum alloy
18	Piston seal	NBR
19	Wear ring	PTFE
20	Rear cover	Aluminum alloy
21	Hex fix screw	Cu

E•MC®

Main Dimension

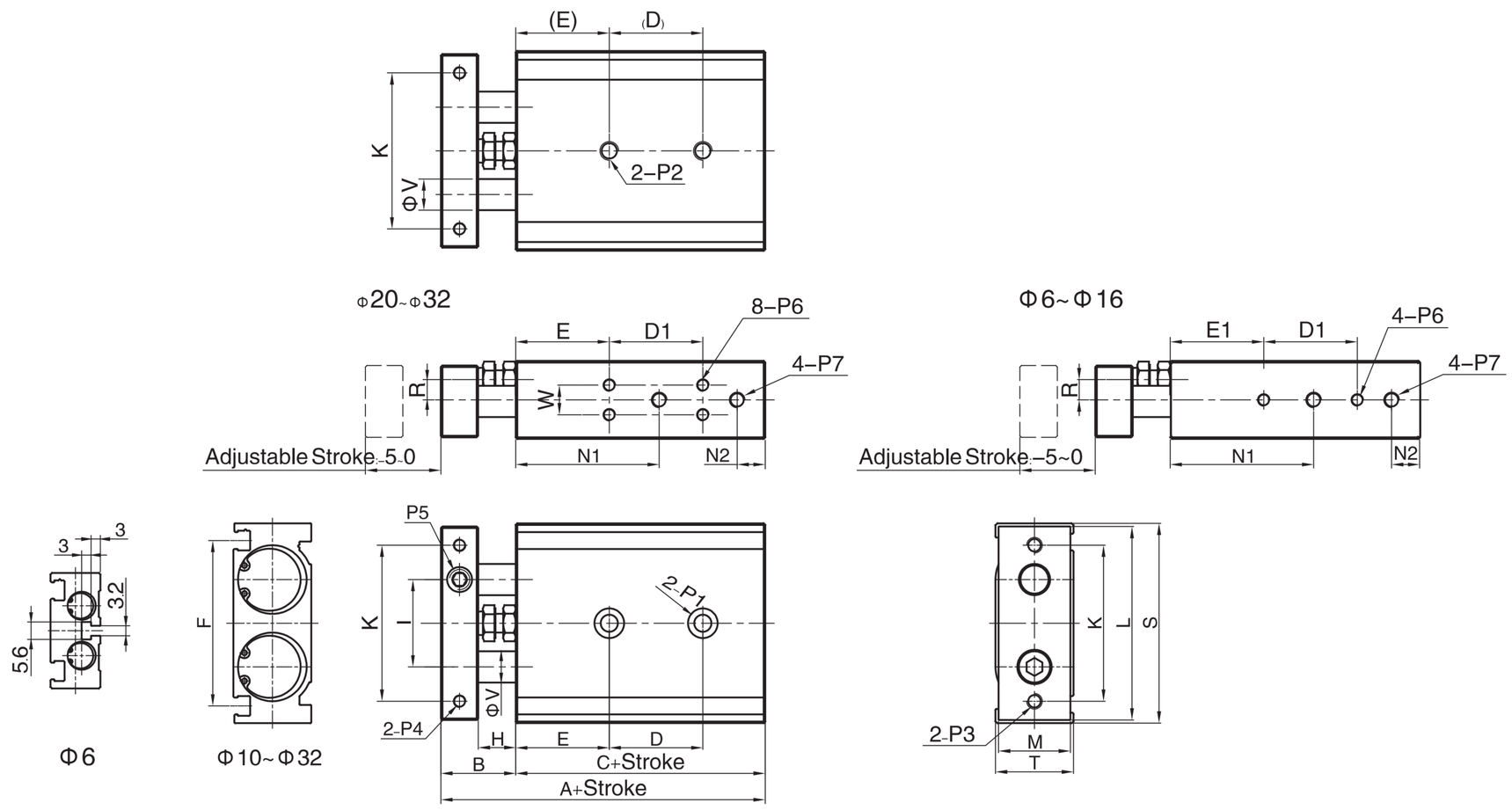

(mm)

Bore\Sign	A	B	C	D D1								E	E1	F	H	I	K	L	M	N1	N2	R
				10~25	30~50	60~80	90~100	125	150	175	200											
6	58.5	13.5	45	D=10+Stroke/2 D1=13+Stroke		–	–	–	–	–	–	13	10	25.8	8	16	28	35	14	24.5	6.5	4.5
10	72	17	55	30	40	50	60	–	–	–	–	20	20	36.5	9	20	35	44	15	30	8	3.5
16	79	19	60	25	35	45	55	65	75	145	145	30	30	47.5	9	25	45	56	18	38	8	5
20	94	24	70	30	40	60	60	80	80	100	100	30	–	53	12	28	50	62	23	46	9	6.5
25	96	24	72	30	40	60	60	80	80	100	100	30	–	64	12	35	60	78	28	43	9	9
32	112	30	82	40	50	70	70	90	90	110	110	30	–	76	14	44	75	96	36	53	10	11.5

Bore\Sign	S	T	V	W	P1	P2	P3	P4	P5	P6	P7
6	37	16	4	–	Φ6.5 Dp:3.3;Thru.hole:Φ3.4	–	M3X0.5	M3X0.5	M3X0.5	M3X0.5 Dp:4.5	M5X0.8
10	46	17	6	–	Φ6.5 Dp:3.3;Thru.hole:Φ3.4	M4X0.7 Dp:7	M4X0.7	M3X0.5	M5X0.8	M3X0.5 Dp:5	M5X0.8
16	58	20	8	–	Φ8 Dp:4.4;Thru.hole:Φ4.3	M5X0.8 Dp:8	M5X0.8	M4X0.7	M6X1.0	M4X0.7 Dp:5	M5X0.8
20	64	25	10	9.5	Φ9.5 Dp:5.3;Thru.hole:Φ5.2	M6X1.0 Dp:10	M5X0.8	M4X0.7 Dp:6	M8X1.25	M4X0.7 Dp:5.5	M5X0.8
25	80	30	12	13	Φ11 Dp:6.3;Thru.hole:Φ6.8	M8X1.25 Dp:12	M6X1.0	M5X0.8 Dp:7.5	M8X1.25	M5X0.8 Dp:7	1/8"
32	98	38	16	20	Φ11 Dp:6.3;Thru.hole:Φ6.8	M8X1.25 Dp:12	M6X1.0	M5X0.8 Dp:8	M10X1.5	M5X0.8 Dp:7	1/8"