EPR2000/3000/4000

Precision Pressure Regulator

Product Features

- High precision , sensitive response.
- Steady output pressure.
- Large flow rate and steady flow output.
- Easy installation : Independent installation by bracket ; Bottom installation; Direct installation with existing modular air preparation.
- High pressure type, medium pressure type and low pressure type optional.

How to Order?

Series No.	— Port Size		Pressure Range	Pressure Gauge Code	Bracket Code	Scale Unit	— Thread Type
EPR2000 EPR3000 EPR4000	2000	01:1/8"	L: 0.005 ~ 0.2MPa M: 0.01 ~ 0.4MPa H: 0.01 ~ 0.8MPa	Blank: With pressure gauge N: No pressure gauge	Blank: With bracket J: No bracket	4: MPa/psi	Blank: G P: PT T:NPT
	3000	02:1/4"					
	4000	02:1/4" 03:3/8" 04:1/2"	L: 0.01 ~ 0.2MPa M: 0.01 ~ 0.4MPa H: 0.01 ~ 0.8MPa				

Order Example: EPR3000 high precision regulator , 1/4" port, pressure range 0.01–0.8MPa ,with gauge.with bracket.scale unit MPa/psi,G thread.
ERP code is EPR3000–02H

Specifications

Model No.		EPR2000–01	EPR3000–02	EPR4000–02	EPR4000–03	EPR4000–04
Working Medium		Clean air(After 5 μm filteration)				
Max. Supply Pressure(Mpa)		1.0				
Min. Supply Pressure(Mpa)		Setting pressure+0.05		Setting pressure+0.1		
Proof Pressure(Mpa)		1.5				
Set Pressure	Low Pressure	L:0.005 ~ 0.2MPa		L:0.01 ~ 0.2MPa		
	Medium Pressure	M:0.01 ~ 0.4MPa				
	High Pressure	H:0.01 ~ 0.8MPa				
Sensitivity		Within 0.2% of full scale				
Repeatability		Within±0.5% of full scale				
Air Consumption		≤4. 4L/min（ANR）		≤11.5L/min（ANR）		
Port Size		1/8"	1/4"	1/4"	3/8"	1/2"
Pressure Gauge Port Size		G1/8(2 locations)				
Working Temperature(℃)		–20~70 (No freezing)				
Weight(g)		140	420	710		

Internal Structure

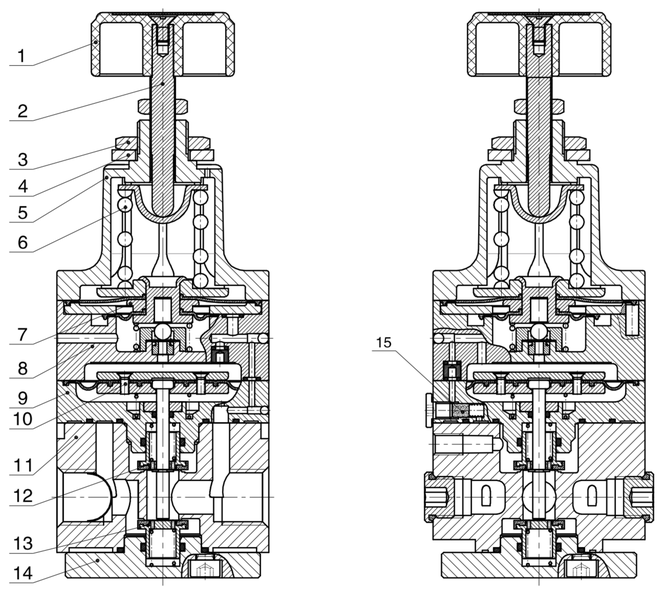

No.	Part Name	Material
1	Pilot regulate button	Plastic
2	Pilot regulate axle	Carbon steel
3	Hex nut	Free Machining Steel
4	Flat washer	SPCC
5	Pilot regulate seat	Aluminum
6	Spring	Spring steel
7	Pilot diaphram assy	Assy
8	Nozzle	Aluminum
9	Middle valve body	Aluminum
10	Main regulate diaphram	Assy
11	Main valve body	Aluminum
12	Exhaust valve core	Assy
13	Inlet valve core	Assy
14	Bottom cover	Aluminum
15	Filter element	High polymer material

Flow Chart

EPR2000

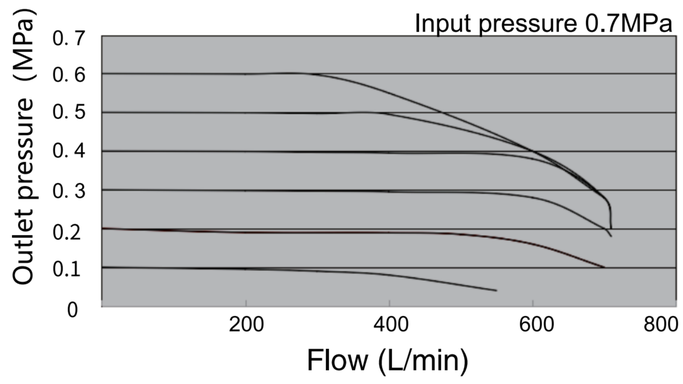

EPR3000

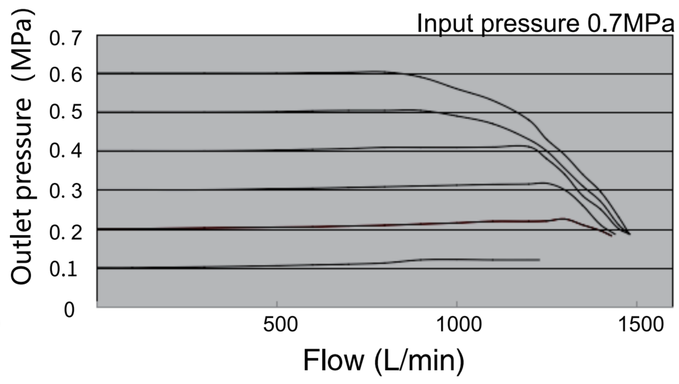

EPR4000

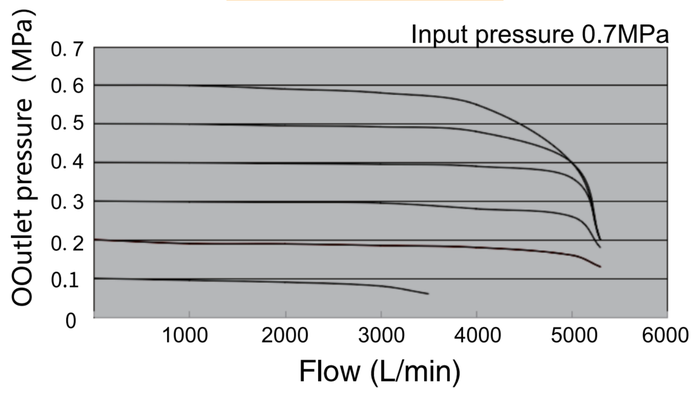

Pressure Characteristic Diagram

EPR2000

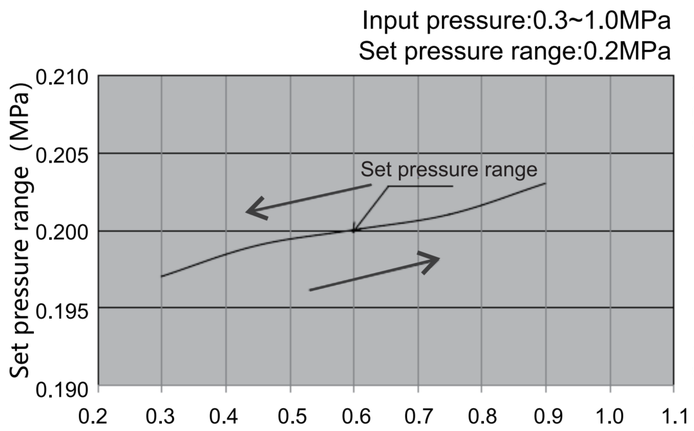

EPR3000

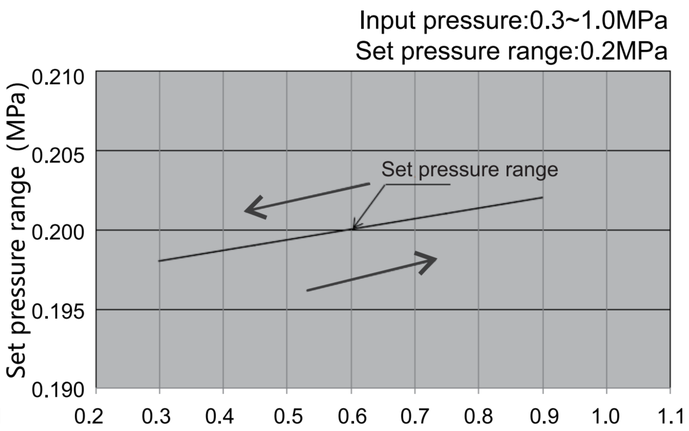

EPR4000

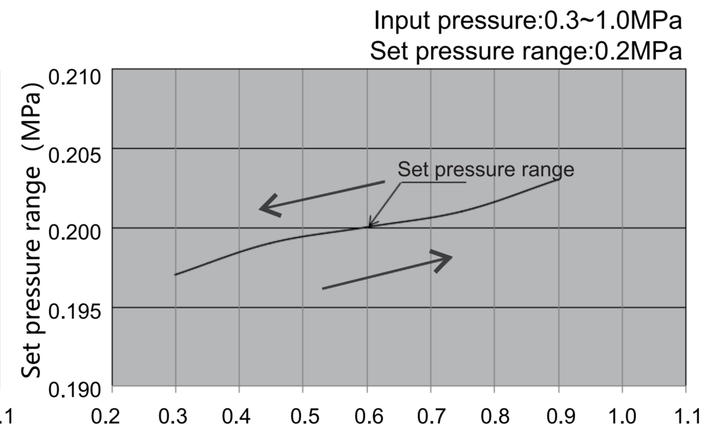

Main Dimension

EPR2000

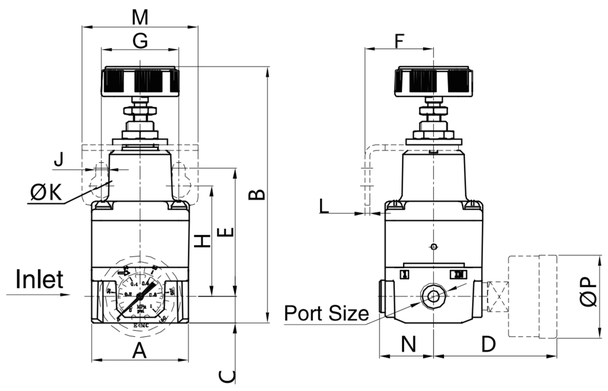

EPR3000

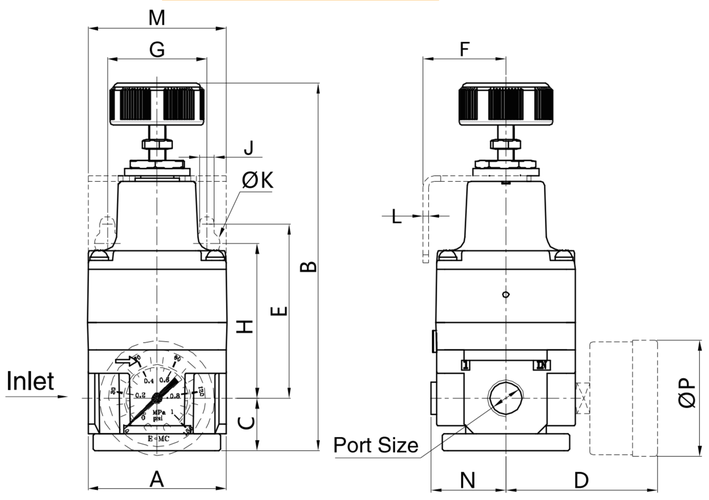

EPR4000

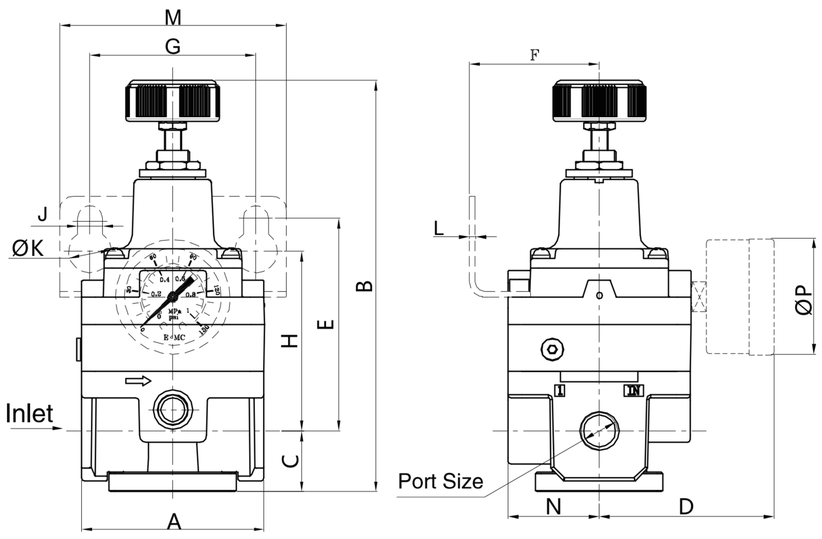

Model	Port Size	A	B	C	D	E	F	G	H	J	K	L	M	N	P
EPR2000	1/8"	35	93	9.5	44.5	46.5	25	28	40	4.5	8.5	2	42	19.5	30
EPR3000	1/4"	50	133	19	55	63	30	36	56	5.5	9.5	2	50	27	42
EPR4000	1/4"、3/8"、1/2"	66	149	22	63.5	77	47	60	65	9	15.5	2	82	33	42