E•MC®

How to Order?

Series No.	O.D. of Tube	—	Port Size	—	Thread Type	Ways
EHVFS EHVSS EHVFF …	04: 4mm 06: 6mm 08: 8mm 10: 10mm 12: 12mm 14: 14mm 16: 16mm		5/32: 5/32 " 3/16: 3/16 " 1/4: 1/4 " 5/16: 5/16 " 3/8: 3/8 " 1/2: 1/2 "		M5: M5 M6: M6 01: 1/8 " 02: 1/4 " 03: 3/8 " 04: 1/2 "	Blank: G P: PT	Blank: 3 ways B: 2 ways

Order example:

EHVFS series plastic fitting, for 6mm OD tube, G1/8" port size, ERP code is EHVFS06–01G
Note: If both sides with tube, then will show its size accordingly. For example, EHVFF hand valve for both 6mm OD tube, ERP code is: EHVFF 06–06

Specifications

Working medium	Air, Vacuum
Working pressure (MPa)	0~0.8
Guaranteed pressure (MPa)	1.2
Working temperature (℃)	0~60
Tube material	Nylon PU tube

Internal Structure

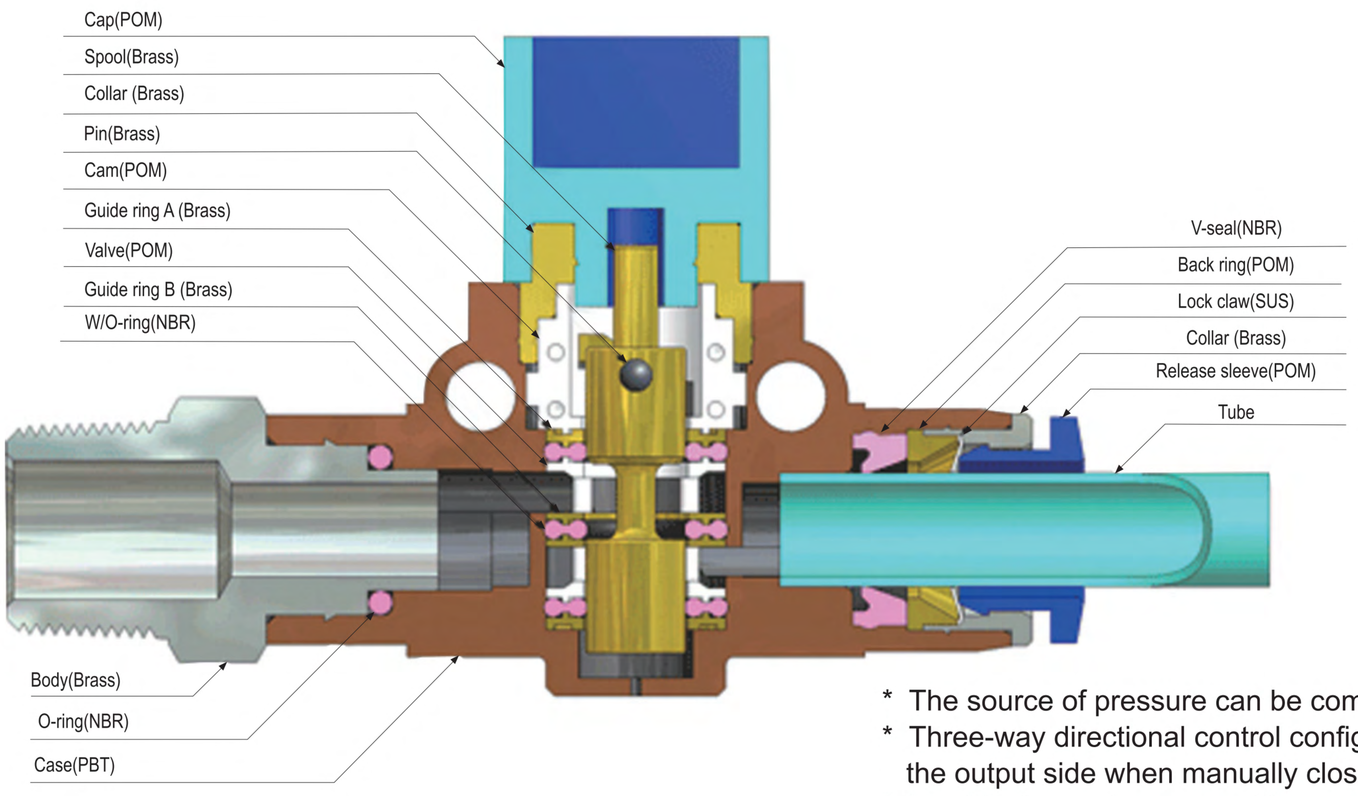

* The source of pressure can be completely shut off by simply turning the knob.
* Three-way directional control configuration releases the residual internal pressure on the output side when manually closed.
* Ideal for inspecting or repairing any devices without compromising the safety.
* Directionality of airflow may be selected from the tubing or threaded input side to the tubing or threaded output side.

Hand Valve

EHVFS

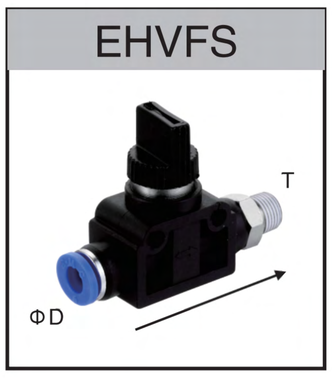

MODEL[ΦD–T]		
Tube(Metric)	Thread(PT)	
EHVFS 06–01P	EHVFS 10–02P	EHVFS 12–02P
EHVFS 06–02P	EHVFS 10–03P	EHVFS 12–03P
EHVFS 06–03P	EHVFS 10–04P	
EHVFS 08–01P		
EHVFS 08–02P		
EHVFS 08–03P		

EHVSS

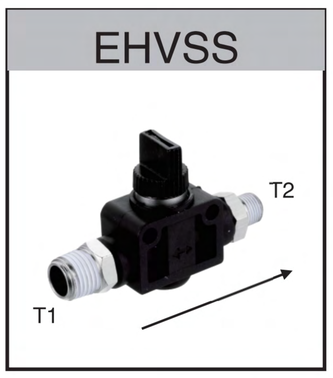

MODEL[T1–T2]	
Thread(PT)	
EHVSS 01–01P	EHVSS 04–03P
EHVSS 02–01P	EHVSS 04–04P
EHVSS 02–02P	
EHVSS 03–02P	
EHVSS 03–03P	

EHVFF

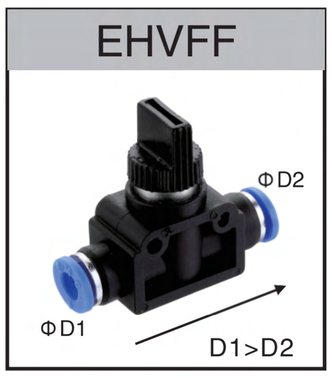

MODEL[ΦD1–ΦD2]	
Tube(Metric)	
EHVFF 06–06	EHVFF 12–10
EHVFF 08–06	EHVFF 12–12
EHVFF 08–08	
EHVFF 10–08	
EHVFF 10–10	

EHVFS–G

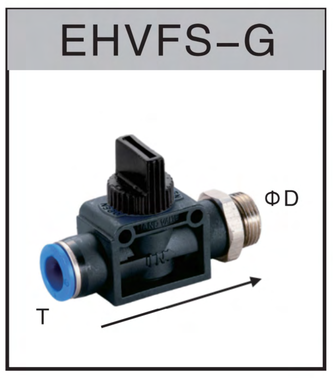

MODEL[T–ΦD]		
Tube(Metric)	Thread(G)	
EHVFS06–01G	EHVFS08–03G	EHVFS12–02G
EHVFS06–02G	EHVFS10–02G	EHVFS12–03G
EHVFS06–03G	EHVFS10–03G	EHVFS12–04G
EHVFS08–01G	EHVFS10–04G	
EHVFS08–02G		

EHVSS–G

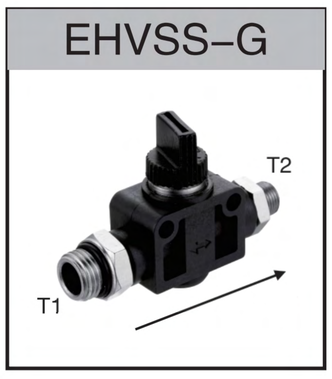

MODEL[ΦT1–ΦT2]	
Thread(G)	
EHVSS 01–02G	EHVSS 04–03G
EHVSS 02–01G	EHVSS 04–04G
EHVSS 02–02G	
EHVSS 03–02G	
EHVSS 03–03G	

Main Dimension

EHVFS

Model	C	d	E	F	L	M	R	A	H
EHVFS06–01P	6	4.2	16.5	24	58.2	18	PT1/8	7.5	40.5
EHVFS06–02P	6	4.2	16.5	24	60.2	18	PT1/4	9.5	40.5
EHVFS06–03P	6	4.2	16.5	24	61.2	18	PT3/8	10.5	40.5
EHVFS08–01P	8	4.2	16.5	24	59.2	18	PT1/8	7.5	40.5
EHVFS08–02P	8	4.2	16.5	24	61.2	18	PT1/4	9.5	40.5
EHVFS08–03P	8	4.2	16.5	24	62.2	18	PT3/8	10.5	40.5
EHVFS10–02P	10	4.2	21.5	29	71.2	22	PT1/4	9.5	45
EHVFS10–03P	10	4.2	21.5	29	72.2	22	PT3/8	10.5	45
EHVFS10–04P	10	4.2	21.5	29	75.2	22	PT1/2	13.5	45
EHVFS12–02P	12	4.2	21.5	29	71.2	22	PT1/4	9.5	45
EHVFS12–03P	12	4.2	21.5	29	72.2	22	PT3/8	10.5	45

Main Dimension

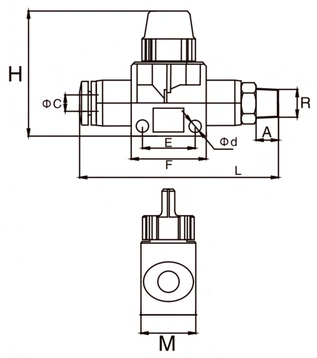

EHVFF

Model	C	D	P	d	E	F	L	M	H
EHVFF06–06	6	6	15	4.2	16.5	24	51	18	40.5
EHVFF08–06	8	6	15	4.2	16.5	24	52	18	40.5
EHVFF08–08	8	8	15	4.2	16.5	24	53	18	40.5
EHVFF10–08	10	8	21	4.2	21.5	29	63	22	45
EHVFF10–10	10	10	21	4.2	21.5	29	63	22	45
EHVFF12–10	12	10	21	4.2	21.5	29	64	22	45
EHVFS12–12	12	12	21	4.2	21.5	29	64	22	45

Main Dimension

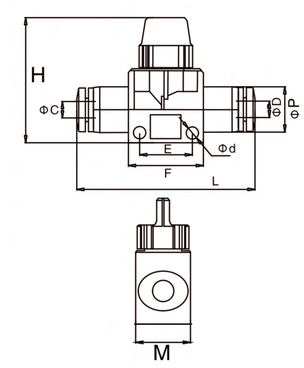

EHVSS–G

Model	H	d	E	F	L	M	R1	A	R2	B
EHVSS01–01G	40.5	4.2	16.5	24	60.4	18	G1/8	5	G1/8	5
EHVSS02–01G	40.5	4.2	16.5	24	61.9	18	G1/4	6.5	G1/8	5
EHVFS02–02G	40.5	4.2	16.5	24	63.4	18	G1/4	6.5	G1/4	6.5
EHVFS03–02G	45	4.2	16.5	24	73.9	18	G3/8	7	G1/4	6.5
EHVFS03–03G	45	4.2	16.5	24	74.4	18	G3/8	7	G3/8	7
EHVFS04–03G	45	4.2	16.5	24	78.4	18	G1/2	10	G3/8	7
EHVFS04–04G	45	4.2	21.5	29	81.4	22	G1/2	10	G1/2	10

Main Dimension

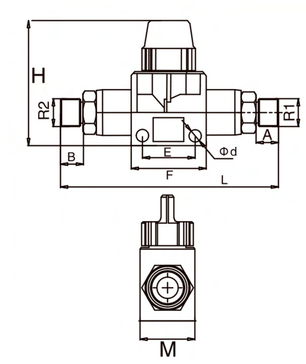

EHVSS

Model	H	d	E	F	L	M	R1	A	R2	B
EHVSS01–01P	40.5	4.2	16.5	24	65.4	18	PT1/8	5	PT1/8	7.5
EHVSS02–01P	40.5	4.2	16.5	24	67.4	18	PT1/4	6.5	PT1/8	7.5
EHVFS02–02P	40.5	4.2	16.5	24	69.4	18	PT1/4	6.5	PT1/4	9.5
EHVFS03–02P	45	4.2	16.5	24	80.4	18	PT3/8	7	PT1/4	9.5
EHVFS03–03P	45	4.2	16.5	24	81.4	18	PT3/8	7	PT3/8	10.5
EHVFS04–03P	45	4.2	16.5	24	84.4	18	PT1/2	10	PT3/8	10.5
EHVFS04–04P	45	4.2	21.5	29	87.4	22	PT1/2	10	PT1/2	13.5

Main Dimension

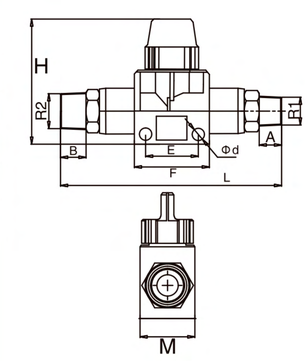

EHVFS–G

Model	C	d	E	F	L	M	R	A	H
EHVFS06–01G	6	4.2	16.5	24	55.7	18	G1/8	5	40.5
EHVFS06–02G	6	4.2	16.5	24	57.2	18	G1/4	6.5	40.5
EHVFS06–03G	6	4.2	16.5	24	57.7	18	G3/8	7	40.5
EHVFS08–01G	8	4.2	16.5	24	56.7	18	G1/8	5	40.5
EHVFS08–02G	8	4.2	16.5	24	58.2	18	G1/4	6.5	40.5
EHVFS08–03G	8	4.2	16.5	24	58.7	18	G3/8	7	40.5
EHVFS10–02G	10	4.2	21.5	29	68.2	22	G1/4	6.5	45
EHVFS10–03G	10	4.2	21.5	29	68.7	22	G3/8	7	45
EHVFS10–04G	10	4.2	21.5	29	72.7	22	G1/2	10	45
EHVFS12–02G	12	4.2	21.5	29	68.2	22	G1/4	6.5	45
EHVFS12–03G	12	4.2	21.5	29	68.7	22	G3/8	7	45

Main Dimension

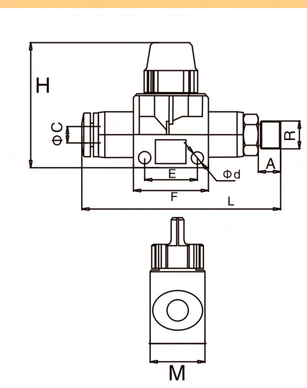

E·MC®

◎ Speed Controller

ZSA	MODEL[ΦD1–ΦD2]		D (metric)	D (inch)	d	A	B		E	Main Dimension
	Tube(Metric)	Tube(Inch)					min	max		
ΦD	ZSA 04	ZSA 5/32	4	5/32	3.2	14	28	31	39.5	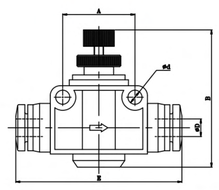
	ZSA 06	ZSA 1/4	6	1/4	4.3	20	40.7	47.5	47.1	
	ZSA 08	ZSA 5/16	8	5/16	4.3	22	44.1	51.8	52	
	ZSA 10	ZSA 3/8	10	3/8	4.3	26	47.7	55.3	62.3	
	ZSA 12	ZSA 1/2	12	1/2	4.3	32	52	58	73.6	

ZSC(Meter–out type)	Tube(Metric)–Thread(PT)		Tube(Inch)–Thread (PT)	Tube(Metric)–Thread(G)		Tube(Inch)–Thread(NPT)	
ΦD R	ZSC 04–M5	ZSC 08–03P	ZSC 1/4–M5	ZSC 04–01G	ZSC 08–04G	ZSC 5/32–M5	ZSC 5/16–01T
	ZSC 04–01P	ZSC 08–04P	ZSC 1/4–01P	ZSC 04–02G	ZSC 10–01G	ZSC 5/32–01T	ZSC 5/16–02T
	ZSC 04–02P	ZSC 10–01P	ZSC 1/4–02P	ZSC 06–01G	ZSC 10–02G	ZSC 3/16–M5	ZSC 5/16–03T
	ZSC 06–M5	ZSC 10–02P	ZSC 5/16–01P	ZSC 06–02G	ZSC 10–03G	ZSC 3/16–01T	ZSC 5/16–04T
	ZSC 06–01P	ZSC 10–03P	ZSC 5/16–02P	ZSC 06–03G	ZSC 10–04G	ZSC 3/16–02T	ZSC 3/8–02T
	ZSC 06–02P	ZSC 10–04P	ZSC 5/16–03P	ZSC 06–04G	ZSC 12–02G	ZSC 3/16–03T	ZSC 3/8–03T
	ZSC 06–03P	ZSC 12–02P	ZSC 3/8–02P	ZSC 08–01G	ZSC 12–03G	ZSC 1/4–M5	ZSC 3/8–04T
	ZSC 06–04P	ZSC 12–03P	ZSC 3/8–03P	ZSC 08–02G	ZSC 12–04G	ZSC 1/4–01T	ZSC 1/2–03T
	ZSC 08–01P	ZSC 12–04P		ZSC 08–03G		ZSC 1/4–02T	ZSC 1/2–04T
	ZSC 08–02P					ZSC 1/4–03T	

ZSC–B(Meter–in type)	Tube(Metric)–Thread(PT)		Tube(Inch)–Thread (PT)	Tube(Metric)–Thread(G)		Tube(Inch)–Thread(NPT)	
ΦD	ZSC 04–M5–B	ZSC 08–03P–B	ZSC 1/4–M5–B	ZSC 04–01G–B	ZSC 08–04G–B	ZSC 5/32–M5–B	ZSC 5/16–01T–B
	ZSC 04–01P–B	ZSC 08–04P–B	ZSC 1/4–01P–B	ZSC 04–02G–B	ZSC 10–01G–B	ZSC 5/32–01T–B	ZSC 5/16–02T–B
	ZSC 04–02P–B	ZSC 10–01P–B	ZSC 1/4–02P–B	ZSC 06–01G–B	ZSC 10–02G–B	ZSC 3/16–M5–B	ZSC 5/16–03T–B
	ZSC 06–M5–B	ZSC 10–02P–B	ZSC 5/16–01P–B	ZSC 06–02G–B	ZSC 10–03G–B	ZSC 3/16–01T–B	ZSC 5/16–04T–B
	ZSC 06–01P–B	ZSC 10–03P–B	ZSC 5/16–02P–B	ZSC 06–03G–B	ZSC 10–04G–B	ZSC 3/16–02T–B	ZSC 3/8–02T–B
	ZSC 06–02P–B	ZSC 10–04P–B	ZSC 5/16–03P–B	ZSC 06–04G–B	ZSC 12–02G–B	ZSC 3/16–03T–B	ZSC 3/8–03T–B
	ZSC 06–03P–B	ZSC 12–02P–B	ZSC 3/8–02P–B	ZSC 08–01G–B	ZSC 12–03G–B	ZSC 1/4–M5–B	ZSC 3/8–04T–B
	ZSC 06–04P–B	ZSC 12–03P–B	ZSC 3/8–03P–B	ZSC 08–02G–B	ZSC 12–04G–B	ZSC 1/4–01T–B	ZSC 1/2–03T–B
	ZSC 08–01P–B	ZSC 12–04P–B		ZSC 08–03G–B		ZSC 1/4–02T–B	ZSC 1/2–04T–B
	ZSC 08–02P–B					ZSC 1/4–03T–B	

ZSC (remove shut–off valve)	Tube(Metric)–Thread(PT)		Tube(Metric)–Thread(G)		Tube(Inch)–Thread(NPT)	
ΦD R	ZSC04–01P–C	ZSC10–01P–C	ZSC04–01G–C	ZSC10–01G–C	ZSC1/8–01T–C	ZSC5/16–03T–C
	ZSC04–02P–C	ZSC10–02P–C	ZSC04–02G–C	ZSC10–02G–C	ZSC1/8–02T–C	ZSC5/16–04T–C
	ZSC06–01P–C	ZSC10–03P–C	ZSC06–01G–C	ZSC10–03G–C	ZSC5/32–01T–C	ZSC3/8–01T–C
	ZSC06–02P–C	ZSC10–04P–C	ZSC06–02G–C	ZSC10–04G–C	ZSC5/32–02T–C	ZSC3/8–02T–C
	ZSC06–03P–C	ZSC12–01P–C	ZSC06–03G–C	ZSC12–01G–C	ZSC1/4–01T–C	ZSC3/8–03T–C
	ZSC06–04P–C	ZSC12–02P–C	ZSC06–04G–C	ZSC12–02G–C	ZSC1/4–02T–C	ZSC3/8–04T–C
	ZSC08–01P–C	ZSC12–03P–C	ZSC08–01G–C	ZSC12–03G–C	ZSC1/4–03T–C	ZSC1/2–02T–C
	ZSC08–02P–C	ZSC12–04P–C	ZSC08–02G–C	ZSC12–04G–C	ZSC1/4–04T–C	ZSC1/2–03T–C
	ZSC08–03P–C		ZSC08–03G–C		ZSC5/16–01T–C	ZSC1/2–04T–C
	ZSC08–04P–C		ZSC08–04G–C		ZSC5/16–02T–C	

◎ Metric Tubing–PT Thread

ZSC(Meter–out type)	Model	D	R	A	B	S	L		Main Dimension
							min	max	
ΦD R	ZSC04–M5	4	M5	4	20.2	8	37.5	44.3	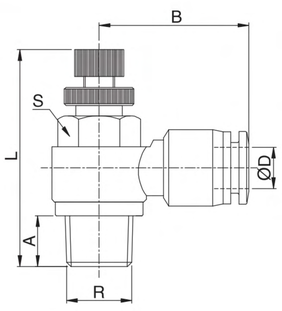
	ZSC04–01P	4	PT1/8	8	22	10	37.5	44.3	
	ZSC04–02P	4	PT1/4	10	25	14	43.7	51.3	
	ZSC06–M5	6	M5	4	21.8	8	28.5	30.3	
	ZSC06–01P	6	PT1/8	8	23.8	12	37.5	44.3	
	ZSC06–02P	6	PT1/4	10	25.8	14	43.7	51.3	
	ZSC06–03P	6	PT3/8	11	27.5	17	48.4	55.3	
	ZSC06–04P	6	PT1/2	14	31	21	52.7	59.5	
	ZSC08–01P	8	PT1/8	8	26.1	14	37.5	44.3	
	ZSC08–02P	8	PT1/4	10	29.2	14	43.7	51.3	
	ZSC08–03P	8	PT3/8	11	30.1	17	48.4	55.3	
	ZSC08–04P	8	PT1/2	14	33.6	21	52.7	59.5	
	ZSC10–02P	10	PT1/4	10	32.7	17	43.7	51.3	
	ZSC10–03P	10	PT3/8	11	33.2	17	48.4	55.3	
	ZSC10–04P	10	PT1/2	14	36.7	21	52.7	59.5	
	ZSC12–02P	12	PT1/4	10	34.7	19	43.7	51.3	
	ZSC12–03P	12	PT3/8	11	36.6	19	48.4	55.3	
	ZSC12–04P	12	PT1/2	14	39	21	52.7	59.5	

Metric Tubing–PT Thread

ZSC(Meter–in type)	Model	D	R	A	B	S	L min	L max	Main Dimension
	ZSC04–M5–B	4	M5	3.5	20.2	8	27.1	29.7	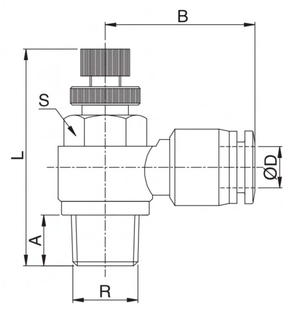
	ZSC04–01–B	4	PT1/8	8	22.5	12	35.3	40.3	
	ZSC04–02–B	4	PT1/4	10	25	14	40.4	45.6	
	ZSC06–M5–B	6	M5	3.5	22.1	8	27.1	29.7	
	ZSC06–01–B	6	PT1/8	8	23.3	12	35.3	40.3	
	ZSC06–02–B	6	PT1/4	10	25.8	14	40.4	45.6	
	ZSC06–03–B	6	PT3/8	11	27.5	19	47.6	53.8	
	ZSC06–04–B	6	PT1/2	14	30	24	53.5	59.9	
	ZSC08–01–B	8	PT1/8	8	25.4	12	35.3	40.3	
	ZSC08–02–B	8	PT1/4	10	28.5	14	40.4	45.6	
	ZSC08–03–B	8	PT3/8	11	29.4	19	47.6	53.8	
	ZSC08–04–B	8	PT1/2	14	32.4	24	53.5	59.9	
	ZSC10–01–B	10	PT1/8	8	30.3	12	35.3	40.3	
	ZSC10–02–B	10	PT1/4	10	32.6	14	40.4	45.6	
	ZSC10–03–B	10	PT3/8	11	32.2	19	47.6	53.8	
	ZSC10–04–B	10	PT1/2	14	36.2	24	53.5	59.9	
	ZSC12–01–B	12	PT1/8	8	32.5	12	35.3	40.3	
	ZSC12–02–B	12	PT1/4	10	34.7	14	40.4	45.6	
	ZSC12–03–B	12	PT3/8	11	36.6	19	47.6	53.8	
	ZSC12–04–B	12	PT1/2	14	39	24	53.5	59.9	

ZSC (remove shut–off valve)	Model	D	R	A	B	S	L min	L max	Main Dimension
	ZSC04–01–C	4	PT1/8	8	22.5	12	35.3	40.3	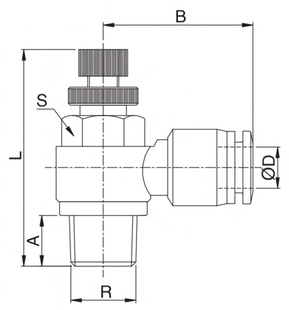
	ZSC04–02–C	4	PT1/4	10	25	14	40.4	45.6	
	ZSC06–01–C	6	PT1/8	8	23.3	12	35.3	40.3	
	ZSC06–02–C	6	PT1/4	10	25.8	14	40.4	45.6	
	ZSC06–03–C	6	PT3/8	11	27.5	19	47.6	53.8	
	ZSC06–04–C	6	PT1/2	14	30	24	53.5	59.9	
	ZSC08–01–C	8	PT1/8	8	25.4	12	35.3	40.3	
	ZSC08–02–C	8	PT1/4	10	28.5	14	40.4	45.6	
	ZSC08–03–C	8	PT3/8	11	29.4	19	47.6	53.8	
	ZSC08–04–C	8	PT1/2	14	32.4	24	53.5	59.9	
	ZSC10–01–C	10	PT1/8	8	30.3	12	35.3	40.3	
	ZSC10–02–C	10	PT1/4	10	32.6	14	40.4	45.6	
	ZSC10–03–C	10	PT3/8	11	32.2	19	47.6	53.8	
	ZSC10–04–C	10	PT1/2	14	36.2	24	53.5	59.9	
	ZSC12–01–C	12	PT1/8	8	32.5	12	35.3	40.3	
	ZSC12–02–C	12	PT1/4	10	34.7	14	40.4	45.6	
	ZSC12–03–C	12	PT3/8	11	36.6	19	47.6	53.8	
	ZSC12–04–C	12	PT1/2	14	39	24	53.5	59.9	

Metric Tubing–G Thread

ZSC(Meter–out type)	Model	D	R	A	B	S	L min	L max	Main Dimension
	ZSC04–01G	4	G1/8	5	22.3	12	37.5	44.3	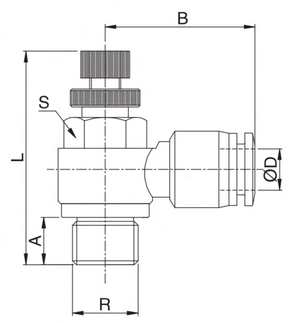
	ZSC04–02G	4	G1/4	6.5	24	17	43.7	51.3	
	ZSC06–01G	6	G1/8	5	22.8	12	37.5	44.3	
	ZSC06–02G	6	G1/4	6.5	24.8	17	43.7	51.3	
	ZSC06–03G	6	G3/8	7	26.5	20	48.4	55.3	
	ZSC06–04G	6	G1/2	10	29.5	24	52.7	59.5	
	ZSC08–01G	8	G1/8	5	25.1	14	37.5	44.3	
	ZSC08–02G	8	G1/4	6.5	28.2	17	43.7	51.3	
	ZSC08–03G	8	G3/8	7	29.1	20	48.4	55.3	
	ZSC08–04G	8	G1/2	10	32.1	24	52.7	59.5	
	ZSC10–02G	10	G1/4	6.5	31.7	17	43.7	51.3	
	ZSC10–03G	10	G3/8	7	32.2	20	48.4	55.3	
	ZSC10–04G	10	G1/2	10	35.2	24	52.7	59.5	
	ZSC12–02G	12	G1/4	6.5	33.7	19	43.7	51.3	
	ZSC12–03G	12	G3/8	7	35.6	20	48.4	55.3	
	ZSC12–04G	12	G1/2	10	37.5	24	52.7	59.5	

ZSC(Meter–in type)	Model	D	R	A	B	S	L min	L max	Main Dimension
	ZSC04–01G–B	4	G1/8	5	22.5	12	36.2	40.9	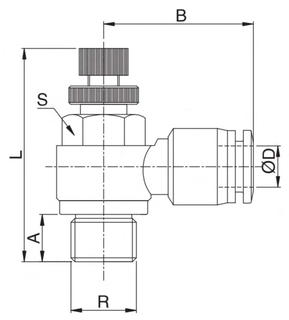
	ZSC04–02G–B	4	G1/4	6.5	25	14	39.7	45.1	
	ZSC06–01G–B	6	G1/8	5	23.3	12	36.2	40.9	
	ZSC06–02G–B	6	G1/4	6.5	25.8	14	39.7	45.1	
	ZSC06–03G–B	6	G3/8	7	27.5	19	49.7	54.2	
	ZSC06–04G–B	6	G1/2	10	30	24	53.4	60.5	
	ZSC08–01G–B	8	G1/8	5	25.4	12	36.2	40.9	
	ZSC08–02G–B	8	G1/4	6.5	28.5	14	39.7	45.1	
	ZSC08–03G–B	8	G3/8	7	29.4	19	49.7	54.2	
	ZSC08–04G–B	8	G1/2	10	32.4	24	53.4	60.5	
	ZSC10–01G–B	10	G1/8	5	30.3	12	36.2	40.9	
	ZSC10–02G–B	10	G1/4	6.5	32.6	14	39.7	45.1	
	ZSC10–03G–B	10	G3/8	7	33.2	19	49.7	54.2	
	ZSC10–04G–B	10	G1/2	10	36.2	24	53.4	60.5	
	ZSC12–01G–B	12	G1/8	5	32.5	12	36.2	40.9	
	ZSC12–02G–B	12	G1/4	6.5	34.7	14	39.7	45.1	
	ZSC12–03G–B	12	G3/8	7	36.6	19	49.7	54.2	
	ZSC12–04G–B	12	G1/2	10	39	24	53.4	60.5	

E·MC®

◎ Metric Tubing–G Thread

ZSC (remove shut–off valve)

Model	D	R	A	B	S	L min	L max
ZSC04–0G1–C	4	G1/8	5	22.5	12	36.2	40.9
ZSC04–02G–C	4	G1/4	6.5	25	14	39.7	45.1
ZSC06–01G–C	6	G1/8	5	23.3	12	36.2	40.9
ZSC06–02G–C	6	G1/4	6.5	25.8	14	39.7	45.1
ZSC06–03G–C	6	G3/8	7	27.5	19	49.7	54.2
ZSC06–04G–C	6	G1/2	10	30	24	53.4	60.5
ZSC08–01G–C	8	G1/8	5	25.4	12	36.2	40.9
ZSC08–02G–C	8	G1/4	6.5	28.5	14	39.7	45.1
ZSC08–03G–C	8	G3/8	7	29.4	19	49.7	54.2
ZSC08–04G–C	8	G1/2	10	32.4	24	53.4	60.5
ZSC10–01G–C	10	G1/8	5	30.3	12	36.2	40.9
ZSC10–02G–C	10	G1/4	6.5	32.6	14	39.7	45.1
ZSC10–03G–C	10	G3/8	7	33.2	19	49.7	54.2
ZSC10–04G–C	10	G1/2	10	36.2	24	53.4	60.5
ZSC12–01G–C	12	G1/8	5	32.5	12	36.2	40.9
ZSC12–02G–C	12	G1/4	6.5	34.7	14	39.7	45.1
ZSC12–03G–C	12	G3/8	7	36.6	19	49.7	54.2
ZSC12–04G–C	12	G1/2	10	39	24	53.4	60.5

Main Dimension

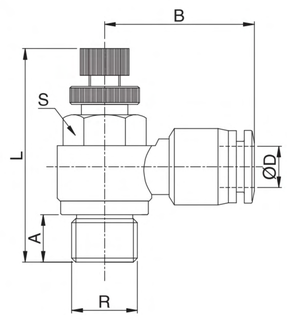

◎ Inch Tubing–NPT Thread

ZSC(Meter–out type)

Model	D	R	A	B	S	L min	L max
ZSC1/8–01T	1/8	NPT1/8	8	22.5	12	35.3	40.3
ZSC1/8–02T	1/8	NPT1/4	10	25	14	40.4	45.6
ZSC5/32–01T	5/32	NPT1/8	8	22.5	12	35.3	40.3
ZSC5/32–02T	5/32	NPT1/4	10	25	14	40.4	45.6
ZSC1/4–01T	1/4	NPT1/8	8	23.3	12	35.3	40.3
ZSC1/4–02T	1/4	NPT1/4	10	25.8	14	40.4	45.6
ZSC1/4–03T	1/4	NPT3/8	11	27.5	19	47.6	53.8
ZSC1/4–04T	1/4	NPT1/2	14	30	24	53.5	59.9
ZSC5/16–01T	5/6	NPT1/8	8	25.4	12	37.5	40.3
ZSC5/16–02T	5/6	NPT1/4	10	28.5	14	43.7	45.6
ZSC5/16–03T	5/6	NPT3/8	11	29.4	19	48.4	53.8
ZSC5/16–04T	5/6	NPT1/2	14	32.4	24	52.7	59.9
ZSC3/8–01T	3/8	NPT1/8	8	30.3	12	43.7	40.3
ZSC3/8–02T	3/8	NPT1/4	10	32.6	14	43.7	45.6
ZSC3/8–03T	3/8	NPT3/8	11	33.2	19	48.4	53.8
ZSC3/8–04T	3/8	NPT1/2	14	36.2	24	52.7	59.9
ZSC1/2–02T	1/2	NPT1/4	10	34.7	14	43.7	45.6
ZSC1/2–03T	1/2	NPT3/8	11	36.6	19	48.4	53.8
ZSC1/2–04T	1/2	NPT1/2	14	39	24	52.7	59.9

Main Dimension

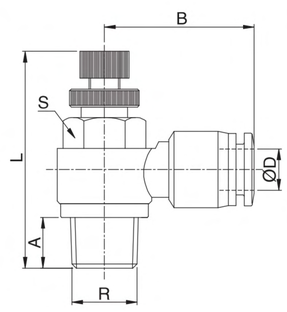

ZSC(Meter–in type)

Model	D	R	A	B	S	L min	L max
ZSC1/8–01T–B	1/8	NPT1/8	8	22.5	12	35.3	40.3
ZSC1/8–02T–B	1/8	NPT1/4	10	25	14	40.4	45.6
ZSC5/32–01T–B	5/32	NPT1/8	8	22.5	12	35.3	40.3
ZSC5/32–02T–B	5/32	NPT1/4	10	25	14	40.4	45.6
ZSC1/4–01T–B	1/4	NPT1/8	8	23.3	12	35.3	40.3
ZSC1/4–02T–B	1/4	NPT1/4	10	25.8	14	40.4	45.6
ZSC1/4–03T–B	1/4	NPT3/8	11	27.5	19	47.6	53.8
ZSC1/4–04T–B	1/4	NPT1/2	14	30	24	53.5	59.9
ZSC5/16–01–B	5/16	NPT1/8	8	25.4	12	37.5	40.3
ZSC5/16–02–B	5/16	NPT1/4	10	28.5	14	43.7	45.6
ZSC5/16–03–B	5/16	NPT3/8	11	29.4	19	48.4	53.8
ZSC5/16–04–B	5/16	NPT1/2	14	32.4	24	52.7	59.9
ZSC3/8–01T–B	3/8	NPT1/8	8	30.3	12	43.7	40.3
ZSC3/8–02T–B	3/8	NPT1/4	10	32.6	14	43.7	45.6
ZSC3/8–03T–B	3/8	NPT3/8	11	33.2	19	48.4	53.8
ZSC3/8–04T–B	3/8	NPT1/2	14	36.2	24	52.7	59.9
ZSC1/2–02T–B	1/2	NPT1/4	10	34.7	14	43.7	45.6
ZSC1/2–03T–B	1/2	NPT3/8	11	36.6	19	48.4	53.8
ZSC1/2–04T–B	1/2	NPT1/2	14	39	24	52.7	59.9

Main Dimension

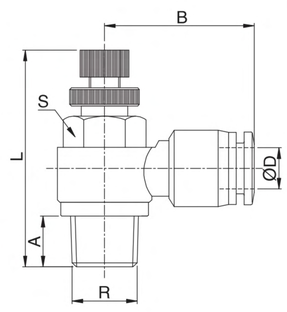

ZSC (remove shut–off valve)

Model	D	R	A	B	S	L min	L max
ZSC1/8–01T–C	1/8	NPT1/8	8	22.5	12	35.3	40.3
ZSC1/8–02T–C	1/8	NPT1/4	10	25	14	40.4	45.6
ZSC5/32–01T–C	5/32	NPT1/8	8	22.5	12	35.3	40.3
ZSC5/32–02T–C	5/32	NPT1/4	10	23.3	14	40.4	45.6
ZSC1/4–01T–C	1/4	NPT1/8	8	25.8	12	35.3	40.3
ZSC1/4–02T–C	1/4	NPT1/4	10	27.5	14	40.4	45.6
ZSC1/4–03T–C	1/4	NPT3/8	11	30	19	47.6	53.8
ZSC1/4–04T–C	1/4	NPT1/2	14	25.4	24	53.5	59.9
ZSC5/16–01T–C	5/16	NPT1/8	8	28.5	12	37.5	40.3
ZSC5/16–02T–C	5/16	NPT1/4	10	29.4	14	43.7	45.6
ZSC5/16–03T–C	5/16	NPT3/8	11	32.4	19	48.4	53.8
ZSC5/16–04T–C	5/16	NPT1/2	14	30.3	24	52.7	59.9
ZSC3/8–01T–C	3/8	NPT1/8	8	32.6	12	43.7	40.3
ZSC3/8–02T–C	3/8	NPT1/4	10	32.2	14	4.37	45.6
ZSC3/8–03T–C	3/8	NPT3/8	11	36.2	19	48.4	53.8
ZSC3/8–04T–C	3/8	NPT1/2	14	32.5	24	52.7	59.9
ZSC1/2–02T–C	1/2	NPT1/4	10	34.7	14	43.7	45.6
ZSC1/2–03T–C	1/2	NPT3/8	11	36.6	19	48.4	53.8
ZSC1/2–04T–C	1/2	NPT1/2	14	39	24	52.7	59.9
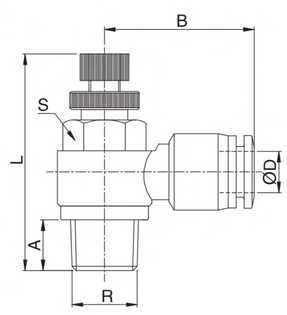
Main Dimension