SQN
Compact Cylinder

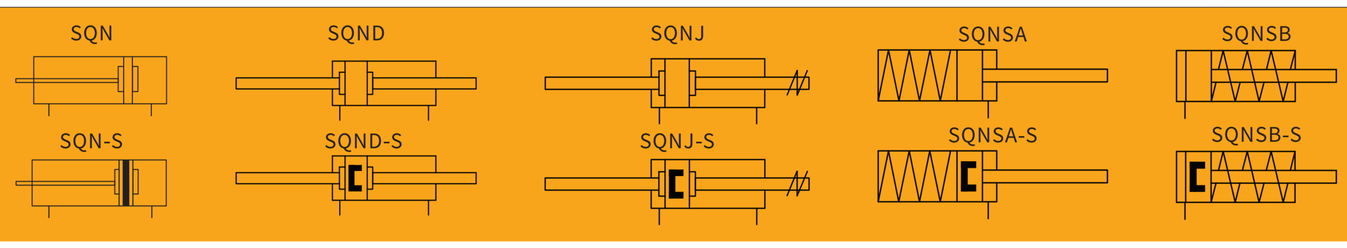

Specifications

Bore(mm)	12	16	20	25	32	40	50	63	80	100
Acting type	Double Acting/Single Acting									
Working medium	Clean Air(40 μ m filteration)									
Working pressure(MPa)	0.1~1.0(Double acting) / 0.2~1.0(Single acting)									
Garanteed pressure(MPa)	1.5									
Working temperature(℃)	–20~70(No freezing)									
Speed range(mm/s)	30~500									
Cushion type	Rubber cushion									
Port size	M5 × 0.8				G1/8❶		G1/4❶		G3/8❶	

❶ PT、NPT port size is optional.

How to Order?

Series No	Type No	Bore	X	Stroke	–	Adjustable Stroke	–	Magnet No	–	Piston Rod Thread Type	–	Thread Type	–	Optional Accessories
SQN	Blank: Basic type D: Double shaft type J: Double shaft and adjustable stroke type SA: Single acting spring extend SB: Single acting spring return	12 16 20 25 ... 100		5 10 15 ...		10 20 30 40 50		Blank: No magnet S: With magnet		Blank: Female thread M: Male thread		Blank: G P: PT T: NPT		FA (Only Φ32 ~ Φ100 optional)

Order Example:

SQN Series single acting spring extend cylinder, 40mm bore, 30mm stroke, with magnet, femal thread on piston rod, G thread.

ERP code is: SQNSA40X30–S

Optional Accessories

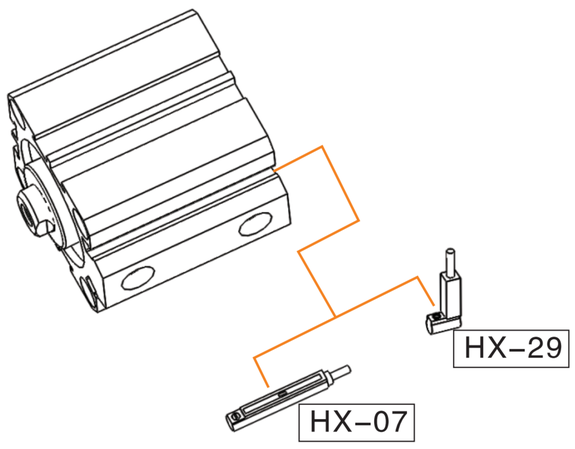

Note:Short stroke please use HX–29 series due to limited space.

Stroke

Bore (mm)		Standard Stroke (mm)	Max. Stroke (mm)
Double Acting	12/16	5 10 15 20 25 30 35 40 45 50	50
	20/25	5 10 15 20 25 30 35 40 45 50 60 70 75 80 90 100 110 120 130 140 150	150
	32~100	5 10 15 20 25 30 35 40 45 50 60 70 75 80 90 100	100
Single Acting	12/16	5 10 15 20	20
	20~63	5 10 15 20 25 30	30

Note:The dimensions of non–std stroke cylinder has the same dimensions as the next longer stroke std. stroke cylinder.
e.g. 27mm stroke cylinder has the same dimensions of 30 std. stroke cylinder.
When ordering stroke is larger than the maximum stroke, please contact us.

Internal Structure

No magnet

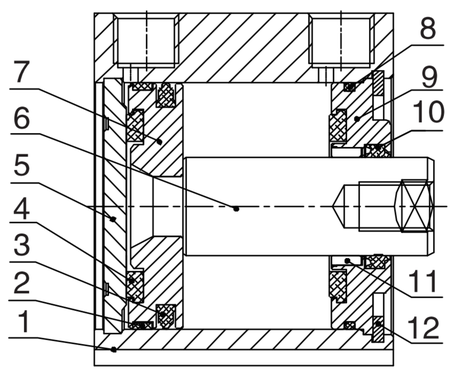

With magnet

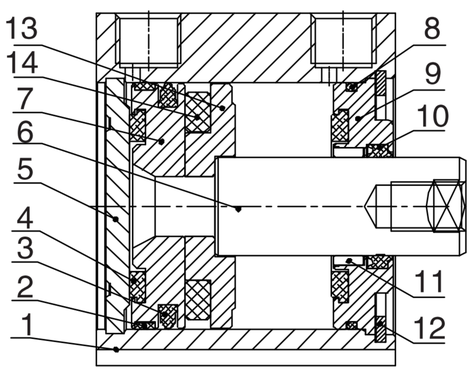

No	Part Name
1	Barrel
2	Wear ring
3	Piston seal
4	Anti–bump cushion
5	Rear cover
6	Piston rod
7	Piston
8	integrated magnet
9	Head cover
10	Piston rod seal
11	Self lubricating bearing
12	C type retainer ring
13	Magnet base
14	Magnet

Main Dimension

SQN Φ12–Φ25 (No magnet)

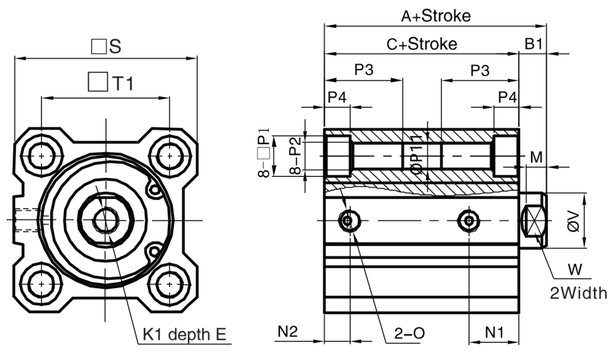

Model / Sign / Bore	Basic Type A St≤50	Basic Type A St≥60	Basic Type C St≤50	Basic Type C St≥60	N1	N2	With Magnet A	With Magnet C	With Magnet N1	With Magnet N2	B1	D	E	M
12	20.5	–	17	–	7.5	5	31.5	28	9	5	3.5	–	6	3.5
16	22	–	18.5	–	8	5.5	34	30.5	9.5	5.5	3.5	–	8	3
20	24	34	19.5	29.5	9	5.5	36	31.5	9.5	5.5	4.5	–	7	4
25	27.5	37.5	22.5	32.5	11	5.5	37.5	32.5	11	5.5	5	–	12	4.5

Bore /Sign	K1	O	P1	P11	P2	P3	P4	S	T1	T2	V	W
12	M3x0.5	M5x0.8	6	3.4	M4x0.7	11	3.5	25	15.5	22	6	5
16	M4x0.7	M5x0.8	6	3.4	M4x0.7	11	3.5	29	20	28	8	6
20	M5x0.8	M5x0.8	9	5.5	M6x1.0	17	5.5	36	25.5	36	10	8
25	M6x1.0	M5x0.8	9	5.5	M6x1.0	17	5.5	40	28	40	12	10

SQN Φ12 (With magnet)

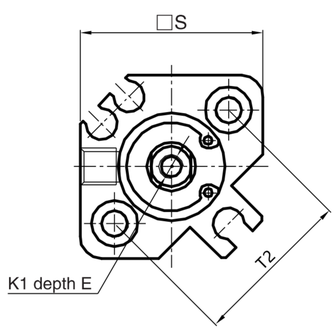

SQN Φ16–Φ25(With magnet)

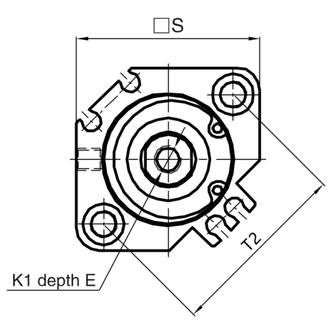

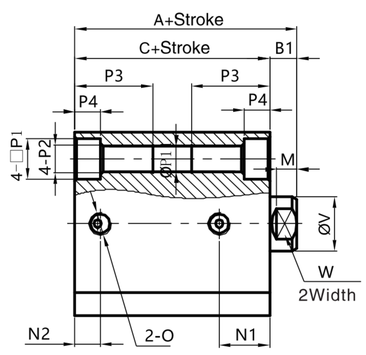

SQN Φ32–Φ100

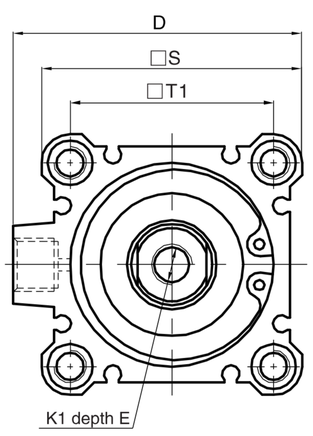

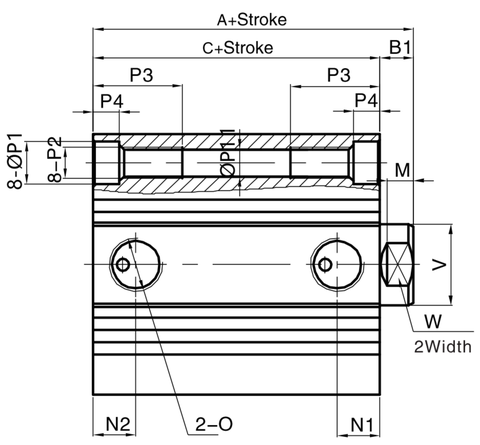

Model / Sign / Bore		Basic Type A St≤50	Basic Type A St≥60	Basic Type C St≤50	Basic Type C St≥60	N1	N2	With Magnet A	With Magnet C	With Magnet N1	With Magnet N2	B1	D	E	M
32	St=5	30	40	23	33	7.5	6.5	40	33	10.5	7.5	7	49.5	13	6
	St>5					10.5	7.5								
40		36.5	46.5	29.5	39.5	11	8	46.5	39.5	11	8	7	57	13	6
50	St=5	38.5	48.5	30.5	40.5	9	9	48.5	40.5	10.5	10.5	8	71	15	6.5
	St>5					10.5	10.5								
63	St=5	44	54	36	46	14	9.5	54	46	15	10.5	8	84	15	6.5
	St>5					15	10.5								
80		53.5	63.5	43.5	53.5	16	14	63.5	53.5	16	14	10	104	20	8.5
100		65	75	53	63	20	17.5	75	63	20	17.5	12	123.5	26	9.5

Bore /Sign	K1	O	P1	P11	P2	P3	P4	S	T1	T2	V	W
32	M8x1.25	1/8"	9	5.5	M6x1.0	17	5.5	45	34	–	16	14
40	M8x1.25	1/8"	9	5.5	M6x1.0	17	5.5	52	40	–	16	14
50	M10x1.5	1/4"	10.5	6.6	M8x1.25	22	6.5	64	50	–	20	17
63	M10x1.5	1/4"	14	9	M10x1.5	28.5	9	77	60	–	20	17
80	M16x2.0	3/8"	17	11	M12x1.75	35.5	11	98	77	–	25	22
100	M20x2.5	3/8"	17	11	M12x1.75	35.5	11	117	94	–	32	27

SQNSA Φ12–Φ25 (No magnet)

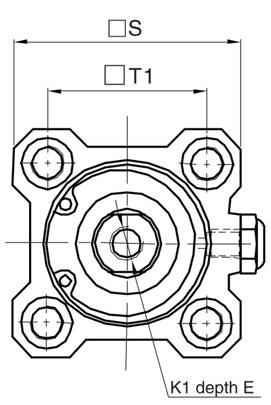

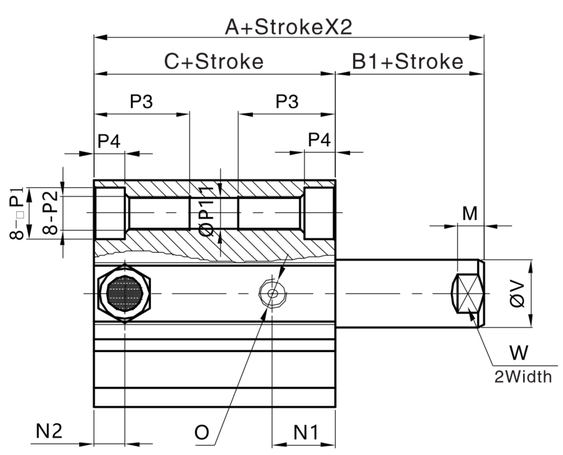

SQSB Φ12–Φ25 (No magnet)

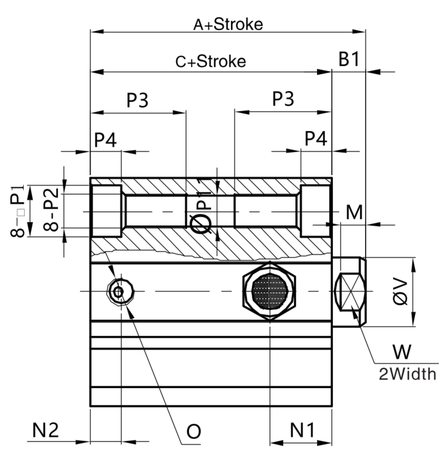

E·MC®

◎ Main Dimension

SQNSA Φ12–Φ25 (With magnet)

Φ12 (With magnet)

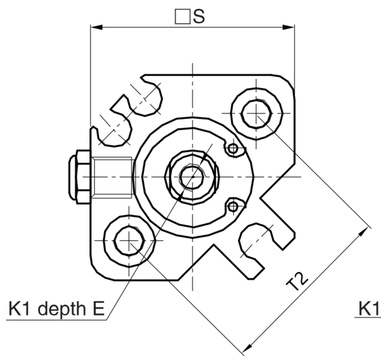

Φ16-Φ25 (With magnet)

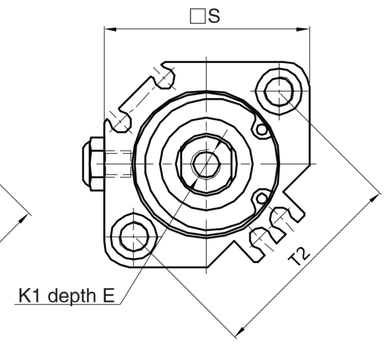

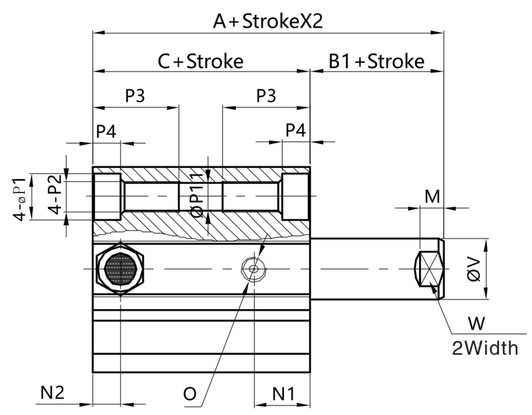

SQNSB Φ12–Φ25 (With magnet)

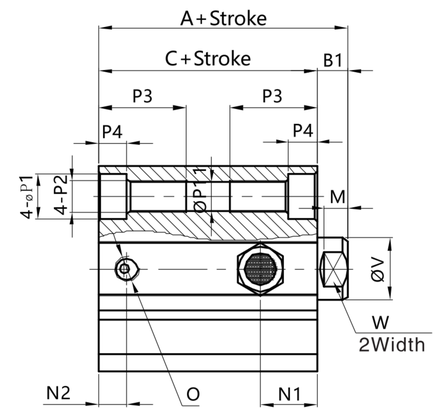

SQNSA Φ32–Φ63

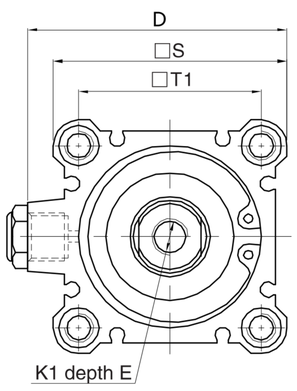

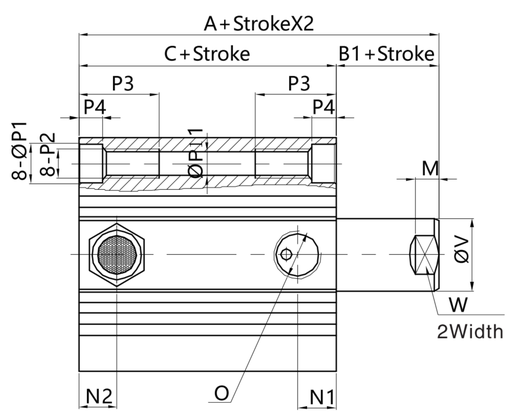

SQNSB Φ32–Φ63

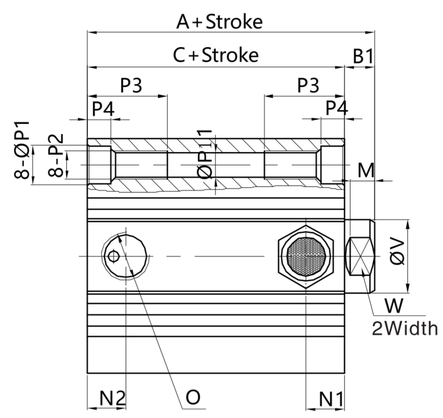

Model	Basic Type										
Bore /Sign	A			C			N1	N2	B1	D	E
Stroke	5/10	15/20	25/30	5/10	15/20	25/30					
12	25.5	30.5	–	22	27	–	7.5	5	3.5	–	6
16	27	32	–	23.5	28.5	–	8	5.5	3.5	–	8
20	29	34	39	24.5	29.5	34.5	9	5.5	4.5	–	7
25	32.5	37.5	42.5	27.5	32.5	37.5	11	5.5	5	–	12
32	35	40	45	28	33	38	10.5	7.5	7	49.5	13
40	41.5	46.5	51.5	34.5	39.5	44.5	11	8	7	57	13
50	48.5	53.5	58.5	40.5	45.5	50.5	10.5	10.5	8	71	15
63	54	59	64	46	51	56	15	10.5	8	84	15

Bore /Sign	O	P1	P11	P2	P3	P4
12	M5x0.8	6	3.4	M4x0.7	11	3.5
16	M5x0.8	6	3.4	M4x0.7	11	3.5
20	M5x0.8	9	5.5	M6x1.0	17	5.5
25	M5x0.8	9	5.5	M6x1.0	17	5.5
32	1/8"	9	5.5	M6x1.0	17	5.5
40	1/8"	9	5.5	M6x1.0	17	5.5
50	1/4"	10.5	6.6	M8x1.25	22	6.5
63	1/4"	14	9	M10x1.5	28.5	9

Model	Basic Type								K1
Bore /Sign	A			C			N1	N2	
Stroke	5/10	15/20	25/30	5/10	15/20	25/30			
12	36.5	41.5	–	33	38	–	9	5	M3x0.5
16	39	44	–	35.5	40.5	–	9.5	5.5	M4x0.7
20	41	46	51	36.5	41.5	46.5	9.5	5.5	M5x0.8
25	42.5	47.5	52.5	37.5	42.5	47.5	11	5.5	M6x1.0
32	45	50	55	38	43	48	10.5	7.5	M8x1.25
40	51.5	56.5	61.5	44.5	49.5	54.5	11	8	M8x1.25
50	58.5	63.5	68.5	50.5	55.5	60.5	10.5	10.5	M10x1.5
63	64	69	74	56	61	66	15	10.5	M10x1.5

Bore /Sign	M	S	T1	T2	V	W
12	3.5	25	15.5	22	6	5
16	3	29	20	28	8	6
20	4	36	25.5	36	10	8
25	4.5	40	28	40	12	10
32	6	45	34	–	16	14
40	6	52	40	–	16	14
50	6.5	64	50	–	20	17
63	6.5	77	60	–	20	17

SQND Φ12–Φ25(No magnet)

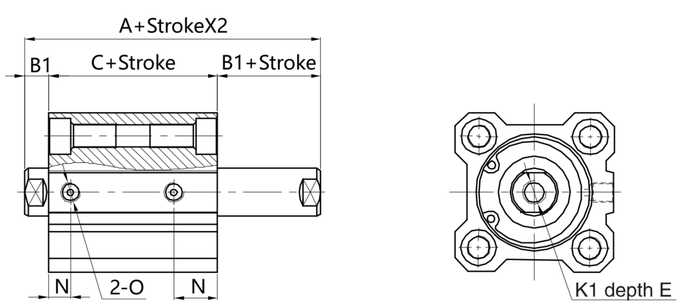

SQND Φ12–Φ25(With magnet)

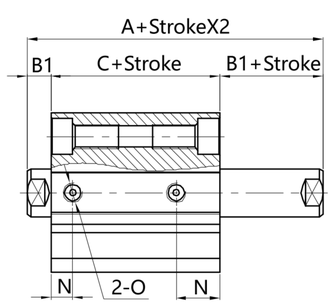

Φ12 (With magnet)

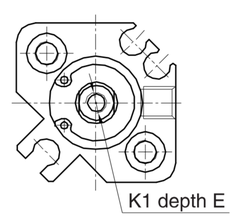

Φ16-Φ25 (With magnet)

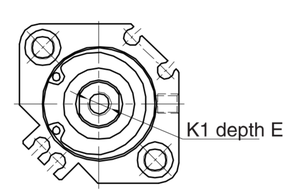

SQND Φ32–Φ100

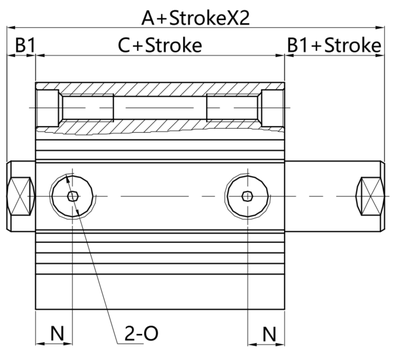

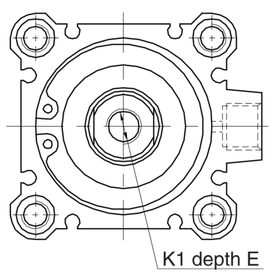

Bore /Sign	A		C		B1	E	N
	Standard	With magnet	Standard	With magnet			
12	32.2	39.4	25.2	32.4	3.5	6	9
16	33	43	26	36	3.5	8	9.5
20	35	47	26	38	4.5	7	9.5
25	39	49	29	39	5	9.5(St=5)/12(St>5)	11
32	44.5	54.5	30.5	40.5	7	9(St≤10)/13(St>10)	10
40	54	64	40	50	7	11(St≤10)/13(St>10)	13
50	56.5	66.5	40.5	50.5	8	12(St≤10)/15(St>10)	13.5
63	58	68	42	52	8	12(St≤10)/15(St>10)	16
80	71	81	51	61	10	14(St≤15)/20(St>15)	16
100	84.5	94.5	60.5	70.5	12	20(St≤25)/26(St>25)	21

Note: Not marked dimensions is same as standard type. Male thread type pls check this page.

Main Dimension

SQNJΦ12–Φ25(No magnet)

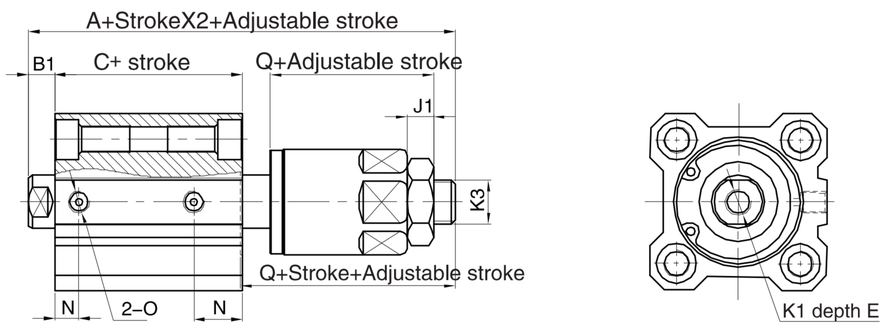

SQNJΦ12–Φ25(With magnet)

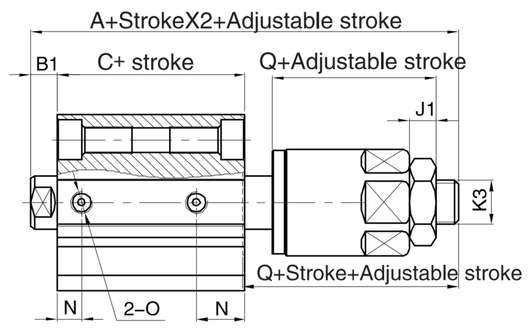

Φ12（With magnet） Φ16-Φ25（With magnet）

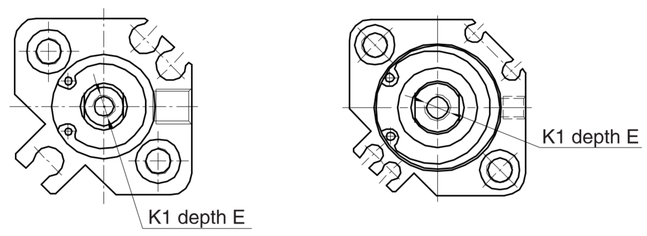

SQNJΦ32–Φ100

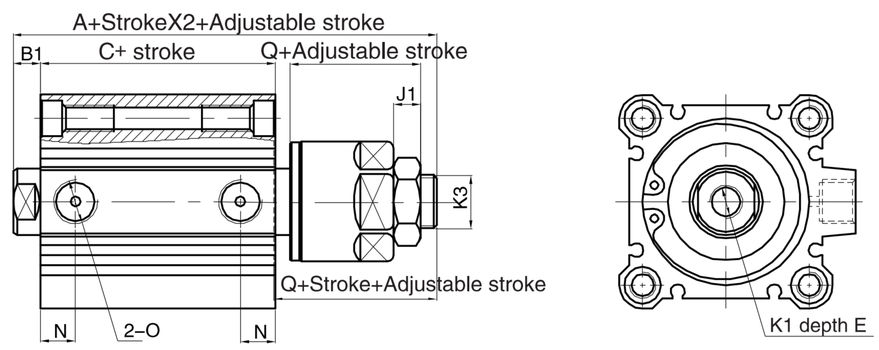

Bore /Sign	A		C		B1	E	N	Q	J1	K3
	Standard	With magnet	Standard	With magnet						
12	45.2	52.4	25.2	32.4	3.5	6	9	17	4	M5x0.8
16	50	60	26	36	3.5	8	9.5	21	5	M6x1.0
20	55	67	26	38	4.5	7	9.5	25	6	M8x1.25
25	61.5	71.5	29	39	5	9.5(St=5)/12(St>5)	11	28	6	M10x1.25
32	67	77	30.5	40.5	7	9(St≤10)/13(St>10)	10	30	8	M14x1.5
40	75.5	85.5	40	50	7	11(St≤10)/13(St>10	13	29	8	M14x1.5
50	80.5	90.5	40.5	50.5	8	12(St≤10)/15(St>10)	13.5	32	11	M18x1.5
63	82	92	42	52	8	12(St≤10)/15(St>10)	16	32	11	M18x1.5
80	97.3	107.3	51	61	10	14(St≤15)/20(St>15)	16	37	13	M22x1.5
100	106.5	116.5	60.5	70.5	12	20(St≤25)/26(St>25)	20	37	13	M26x1.5

Male type dimension

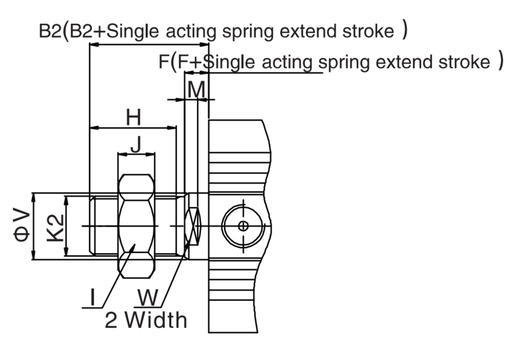

Bore /Sign	B2	F	H	I	J	K2	M	V	W
12	14	3.5	9	8	4	M5x0.8	3.5	6	5
16	15.5	3.5	10	10	5	M6x1.0	3	8	6
20	18.5	4.5	12	12	6	M8x1.25	4	10	8
25	22.5	5	15	17	6	M10x1.25	4.5	12	10
32	28.5	5	20.5	19	8	M14x1.5	4	16	14
40	28.5	5	20.5	19	8	M14x1.5	4	16	14
50	33.5	5	26	27	11	M18x1.5	4	20	17
63	33.5	5	26	27	11	M18x1.5	4	20	17
80	43.5	8	32.5	32	13	M22x1.5	6	25	22
100	43.5	8	32.5	36	13	M26x1.5	5.5	32	27

FA

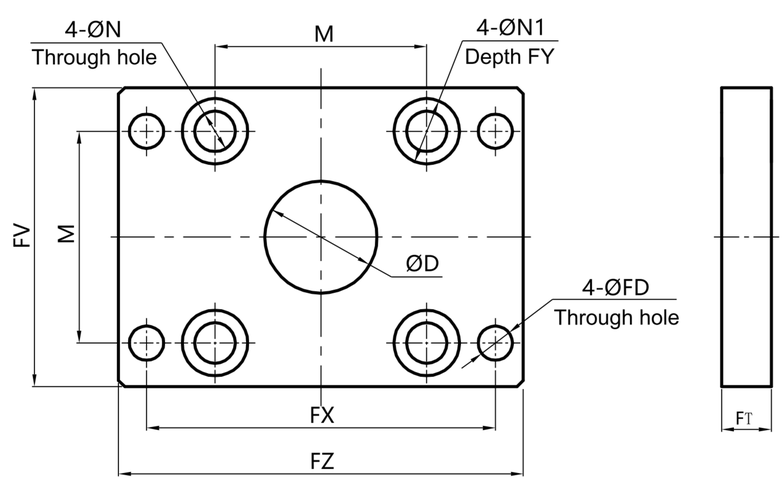

Bore/Sign	M	N	N1	FD	FT	FV	FX	FY	FZ	D	Mathching screws (Short head hexagon socket head screw)
SQN32–FA	34	6.5	10.5	5.5	8	48	56	4.3	65	23	GSH6X16B(Black)X4
SQN40–FA	40	6.5	10.5	5.5	8	54	62	4.3	72	29	GSH6X16B(Black)X4
SQN50–FA	50	8.5	13.5	6.5	9	67	76	5.3	89	36	GSH8X16B(Black)X4
SQN63–FA	60	10.5	16.5	9	10	80	92	6.3	108	36	GSH10X20B(Black)X4
SQN80–FA	77	12.5	18.5	11	12	99	116	7.5	134	44	GSH12X25B(Black)X4
SQN100–FA	94	12.5	18.5	11	12	117	136	7.5	154	60	GSH12X25B(Black)X4

Note：Surface treatment：Shot blasting-Electrophoresis（black）

E·MC®

◎ Main Dimension

Attachment LB(Ø12~Ø25)

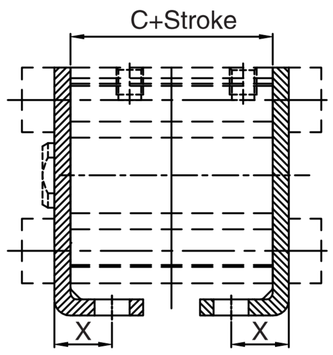

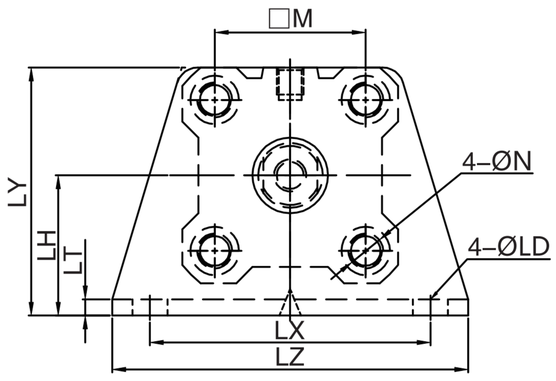

Attachment LB(Ø32~Ø100)

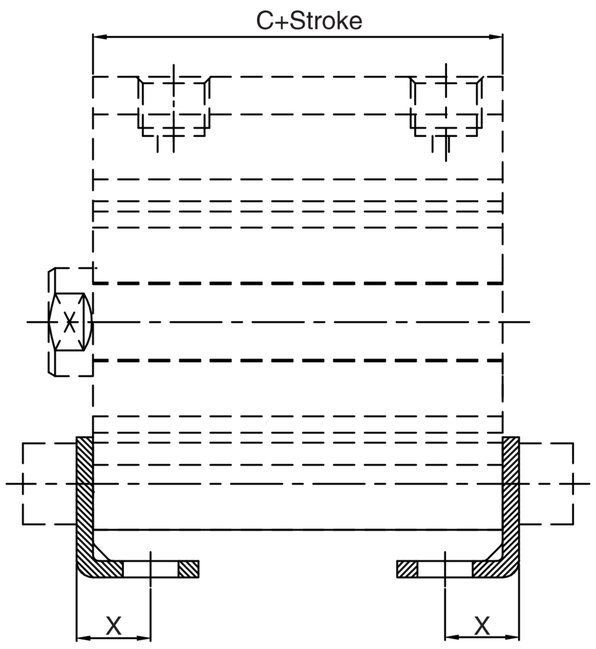

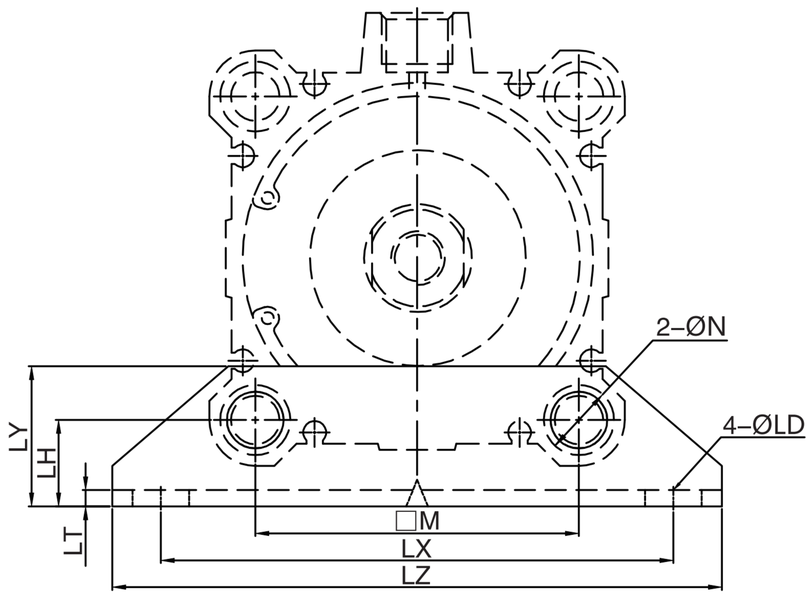

Bore/Symbol	C			M	N	X	LD	LH	LT	LX	LY	LZ
	Standard		Attached Magnet									
Stroke	St≤50	St≥60										
12	17	–	28	15.5	4.5	8	4.5	17	2	34	29.5	44
16	18.5	–	30.5	20	4.5	8	4.5	19	2	38	33.5	48
20	19.5	29.5	31.5	25.5	6.5	9.2	6.5	24	3	48	42	62
25	22.5	32.5	32.5	28	6.5	10.7	6.5	26	3	52	46	66
32	23	33	33	34	6.5	11.2	6.5	13	3	57	20	71
40	29.5	39.5	39.5	40	6.5	11.2	6.5	13	3	64	20	78
50	30.5	40.5	40.5	50	8.5	12.2	8.5	14	3	79	22	95
63	36	48	46	60	10.5	13.7	10.5	16	3	95	26	113
80	43.5	53.5	53.5	77	13	16.5	13	20.5	4.5	118	32	140
100	53	63	63	94	13	23	13	24	6	137	36	162