SD
Compact Cylinder

Pneumatic Symbols

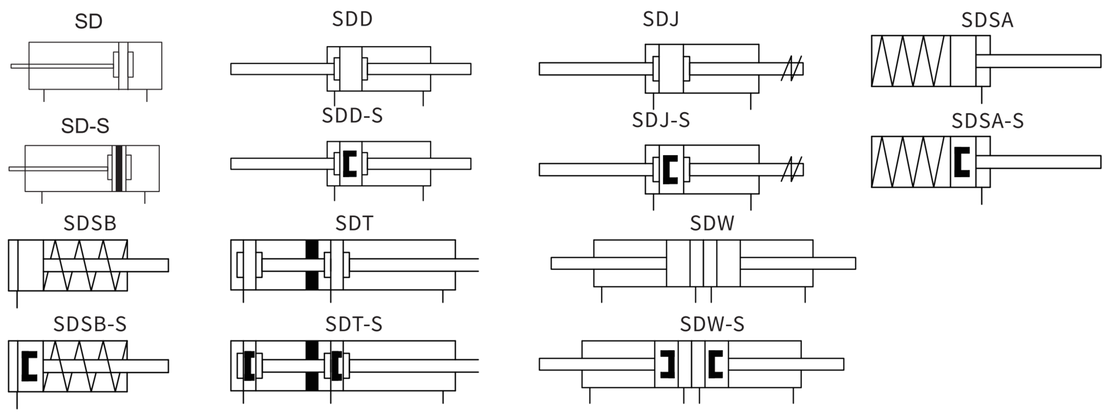

Specifications

Bore(mm)	12	16	20	25	32	40	50	63	80	100
Acting type	Double Acting									
Working medium	Clean Air(40 μ m filteration)									
Working pressure(MPa)	0.1~1.0(Double acting) / 0.2~1.0(Single acting)									
Garanteed pressure(MPa)	1.5									
Working temperature(℃)	–20~70(No freezing)									
Speed range(mm/s)	30~500									
Cushion type	Rubber cushion									
Port size	M5 × 0.8				G1/8❶		G1/4❶		G3/8❶	

❶ PT、NPT port size is optional.

Product Features

* Compact cylinder, light weight.
* Unique slot type barrel design easy for magnet switch install.
* Equipped with self–lubricating bearings, piston rod no need extra lubricating.
* Magnet optional.

How to Order?

Series No | Type No | Bore X Stroke – Adjustable Stroke – Magnet No – Piston Rod Thread Type – Thread Type

- Series No: SD
- Type No: Blank: Basic type; D: Double shaft type; J: Double shaft and adjustable stroke type; SA: Single acting spring extend; SB: Single acting spring return
- Bore: 12, 16, 20, 25 … 100
- Stroke: 5, 10, 15 …
- Adjustable Stroke: 10, 20, 30, 40, 50, 75, 100
- Magnet No: Blank: No magnet; S: With magnet
- Piston Rod Thread Type: Blank: Female thread; M: Male thread
- Thread Type: Blank: G; P: PT; T: NPT

Series No | Type No | Bore X Stroke1 X Stroke12 – Magnet No – Piston Rod Thread Type – Thread Type

- Series No: SD
- Type No: T: Multi position type; W: Double shaft and Multi position type
- Bore: 12, 16, 20, 25 … 100
- Stroke1: 5, 10, 15 …
- Stroke12: 25, 50, 75 …
- Magnet No: Blank: No magnet; S: With magnet
- Piston Rod Thread Type: Blank: Female thread; M: Male thread
- Thread Type: Blank: G; P: PT; T: NPT

Ordering Example : SD series, single acting spring extend, bore 40mm, stroke 30mm, with magnet, piston rod thread female thread type, G thread.ERP code is :SDSA40X30–S

Optional Accessories (Magnetic Opening)

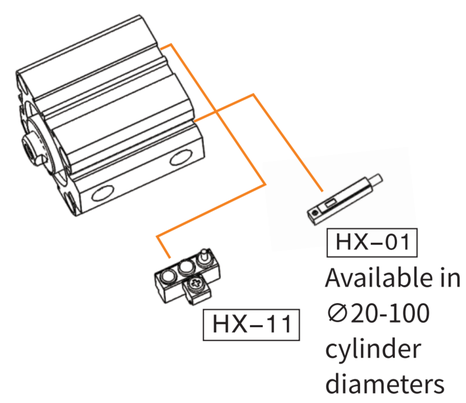

Stroke

Bore (mm)		Standard Stroke (mm)	Max. Stroke (mm)
Double Acting	12/16	5 10 15 20 25 30 35 40 45 50 55 60	60
	20	5 10 15 20 25 30 35 40 45 50 55 60 65 70 75 80 85 90 100 110 120 130 140 150	150
	25	5 10 15 20 25 30 35 40 45 50 55 60 65 70 75 80 85 90 100 110 120 130 140 150	150
	32~100	5 10 15 20 25 30 35 40 45 50 55 60 65 70 75 80 85 90 100 110 120 130 140 150 160 170 180 190 200	200
Single Acting	12~63	5 10 15 20 25 30	30

Note:The dimensions of non–std stroke cylinder has the same dimensions as the next longer stroke std. stroke cylinder.e.g. 27mm stroke cylinder has the same dimensions of 30 std. stroke cylinder.

Internal Structure

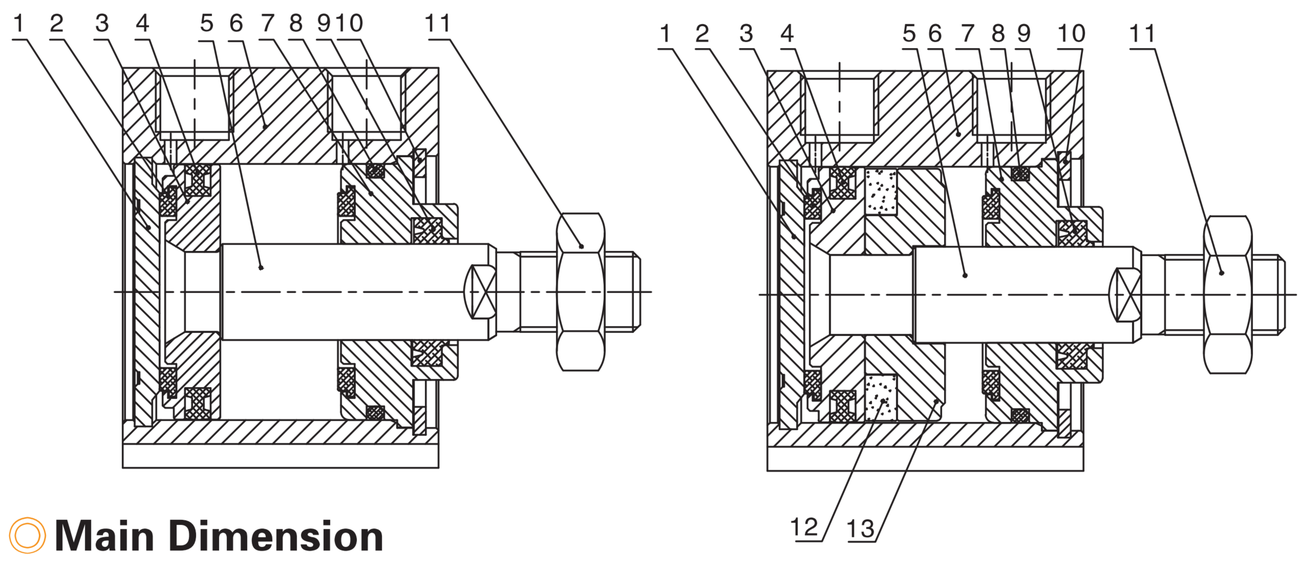

No	Part Name	Material
1	Rear cover	Aluminum alloy
2	Anti–bump cushion	TPU
3	Piston	Aluminum alloy
4	Piston seal	NBR
5	Piston rod	S45C hard chrome carbon steel
6	Barrel	Aluminum alloy
7	Head cover	Aluminum alloy
8	O–ring	NBR
9	Piston rod seal	TPU
10	C type retainer ring	Spring steel
11	Nut	Carbon steel
12	Magnet	RbFeb
13	Magnet base	Aluminum alloy

Main Dimension

SD Φ12–Φ16

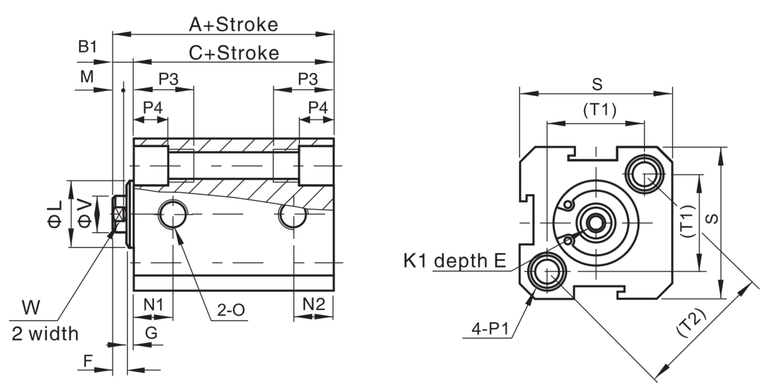

SD Φ20–Φ100

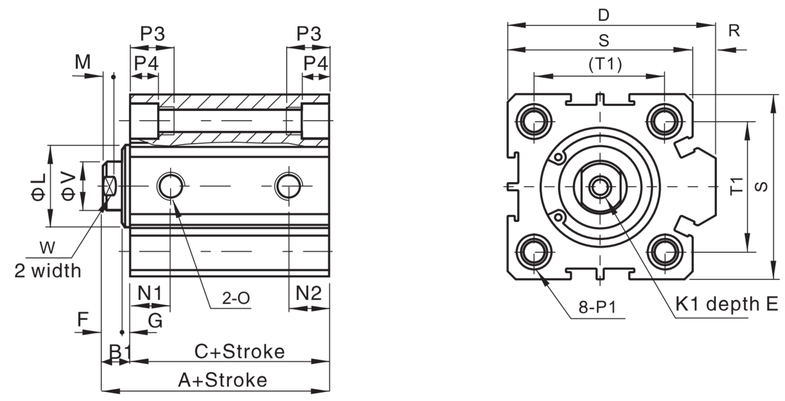

Sign / Bore	A standard	A With magnet	C standard	C With magnet	B1	D	E	F	G	K1	L	M	N1 St=5	N1 St>5	N2 St=5	N2 St>5	O	P1	P3	P4	R	S	T1	T2	V	W
12	22	32	17	27	5	–	6	4	1	M3X0.5	10.2	3	7.5	7.5	5	5	M5X0.8	Counter bore: Φ6.5 Thread: M5X0.8 Through Hole: Φ4.2	12	4.5	–	25	16.2	23	6	5
16	24	34	18.5	28.5	5.5	–	6	4	1.5	M3X0.5	11	3	8	8	5	5.5	M5X0.8	Counter bore: Φ6.5 Thread: M5X0.8 Through Hole: Φ4.2	12	4.5	–	29	19.8	28	6	5
20	25	35	19.5	29.5	5.5	36	8	4	1.5	M4x0.7	13	3	8.2	9	5	5.5	M5X0.8	Counter bore: Φ6.5 Thread: M5X0.8 Through Hole: Φ4.2	14	4.5	2	34	24	–	8	6
25	27	37	21	31	6	42	10	4	2	M5X0.8	17	3	9	9	5.5	5.5	M5X0.8	Counter bore: Φ8.2 Thread: M6X1.0 Through Hole: Φ5.2	15	5.5	2	40	28	–	10	8
32	31.5	41.5	24.5	34.5	7	50	12	4.5	2.5	M6X1.0	22	3	9	9	6.5	9	1/8"	Counter bore: Φ8.2 Thread: M6X1.0 Through Hole: Φ5.2	16	5.5	6	44	34	–	12	10
40	33	43	26	36	7	58.5	12	4	3	M8X1.25	28	3	9.5	9.5	7.5	7.5	1/8"	Counter bore: Φ10.2 Thread: M8X1.25 Through Hole: Φ6.8	20	7.5	6.5	52	40	–	16	14
50	37	47	28	38	9	71.5	15	5	4	M10X1.5	38	3	8	10.5	8	10.5	1/4"	Counter bore: Φ11 Thread: M8X1.25 Through Hole: Φ6.8	25	8.5	9.5	62	48	–	20	17
63	41	51	32	42	9	84.5	15	5	4	M10X1.5	40	3	9.5	12	9.5	11	1/4"	Counter bore: Φ11 Thread: M8X1.25 Through Hole: Φ6.8	25	8.5	9.5	75	60	–	20	17
80	52	62	41	51	11	104	20	6	5	M14X1.5	45	4	11.5	14.5	11.5	14.5	3/8"	Counter bore: Φ17 Thread: M12X1.75 Through Hole: Φ10.3	25	11	10	94	74	–	25	22
100	63	73	51	61	12	124	20	7	5	M18X1.5	55	4	16	20.5	16	20.5	3/8"	Counter bore: Φ19 Thread: M14X2.0 Through Hole: Φ12.2	30	13	10	114	90	–	32	27

SDW Φ12–Φ16

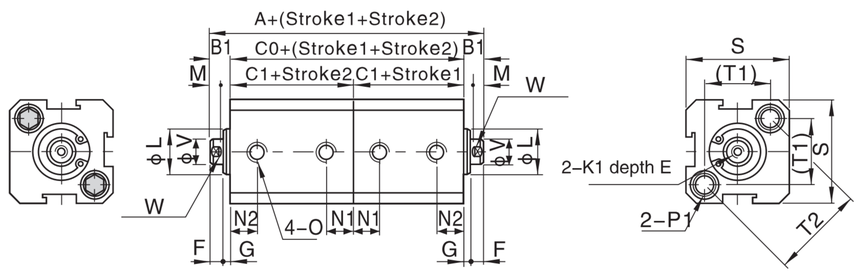

SDW Φ20–Φ100

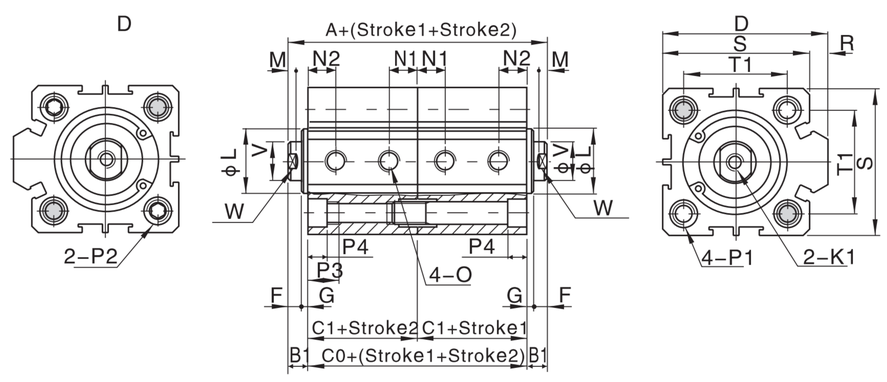

Bore/Sign	Basic Type A	Basic Type C0	Basic Type C1	With Magnet A	With Magnet C0	With Magnet C1	B1	D	E	F	G	K1	L	M	N2 S=5	N2 S>5	N1 S=5	N1 S>5
12	44	34	17	64	54	27	5	–	6	4	1	M3x0.5	10.2	3	7.5	7.5	5	5
16	48	37	18.5	68	57	28.5	5.5	–	6	4	1.5	M3x0.5	11	3	8	8	5	5.5
20	50	39	19.5	70	59	29.5	5.5	36	8	4	1.5	M4x0.7	13	3	8.2	9	5	5.5
25	54	42	21	74	62	31	6	42	10	4	2	M5x0.8	17	3	9	9	5.5	5.5
32	63	49	24.5	83	69	34.5	7	50	12	4.5	2.5	M6x1	22	3	9	9	6.5	9
40	66	52	26	86	72	36	7	58.5	12	4	3	M8x1.25	28	3	9.5	9.5	7.5	7.5
50	74	56	28	94	76	38	9	71.5	15	5	4	M10x1.5	38	3	8	10.5	8	10.5
63	82	64	32	102	84	42	9	84.5	15	5	4	M10x1.5	40	3	9.5	12	9.5	11
80	104	82	41	124	102	51	11	104	20	6	5	M14x1.5	45	4	14.5	14.5	14.5	14.5
100	126	102	51	146	122	61	12	124	20	7	5	M18x1.5	55	4	20.5	20.5	20.5	20.5

Bore/Sign	O	W	P1	P2	P3	P4	R	S	T1	T2	V
12	M5x0.8	5	Φ6.5 Thread: M5X0.8 Through Hole: Φ4.2	–	12	4.5	–	25	16.2	23	6
16	M5x0.8	5	Φ6.5 Thread: M5X0.8 Through Hole: Φ4.2	–	12	4.5	–	29	19.8	28	6
20	M5x0.8	6	Counter bore: Φ6.5 Thread: M5X0.8 Through Hole: Φ4.2	Counter bore: Φ6.5 Through Hole: Φ5.2	14	4.5	2	34	24	–	8
25	M5x0.8	8	Counter bore: Φ8.2 Thread: M6X1.0 Through Hole: Φ5.2	Counter bore: Φ8.2 Through Hole: Φ6.2	15	5.5	2	40	28	–	10
32	1/8"	10	Counter bore: Φ8.2 Thread: M6X1.0 Through Hole: Φ5.2	Counter bore: Φ8.2 Through Hole: Φ6.2	16	5.5	6	44	34	–	12
40	1/8"	14	Counter bore: Φ10.2 Thread: M8X1.25 Through Hole: Φ6.8	Counter bore: Φ10 Through Hole: Φ8.2	20	7.5	6.5	52	40	–	16
50	1/4"	17	Counter bore: Φ11 Thread: M8X1.25 Through Hole: Φ6.8	Counter bore: Φ11 Through Hole: Φ8.5	25	8.5	9.5	62	48	–	20
63	1/4"	17	Counter bore: Φ11 Thread: M8X1.25 Through Hole: Φ6.8	Counter bore: Φ11 Through Hole: Φ8.5	25	8.5	9.5	75	60	–	20
80	3/8"	22	Counter bore: Φ17 Thread: M12X1.75 Through Hole: Φ10.3	Counter bore: Φ17 Through Hole: Φ12.3	25	11	10	94	74	–	25
100	3/8"	27	Counter bore: Φ19 Thread: M14X2 Through Hole: Φ12.2	Counter bore: Φ19 Through Hole: Φ14.2	30	13	10	114	90	–	32

E·MC®

◎ Main Dimension

SDD Φ12–Φ100

Φ12–16

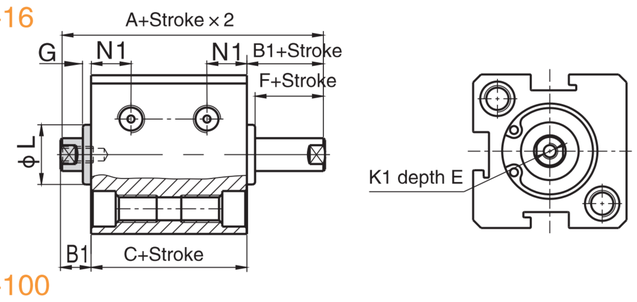

Φ20–100

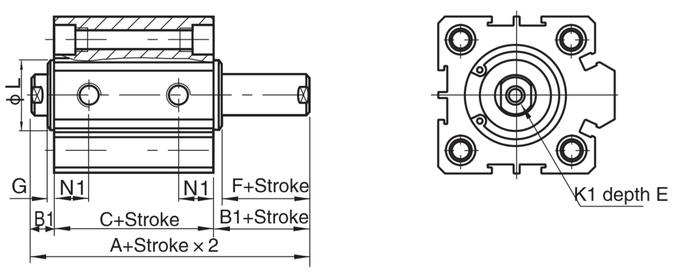

Bore	Basic Type		With Magnet		E		B1	F	G	K1	L	N1	
	A	C	A	C	S≤10	S>10						S=5	S>5
12	27	17	37	27	6		5	4	1	M3x0.5	10.2	5.5	6.3
16	29.5	18.5	39.5	28.5	6		5.5	4	1.5	M3x0.5	11	6	7.3
20	30.5	19.5	40.5	29.5	8		5.5	4	1.5	M4x0.7	15	6.5	7.5
25	33	21	43	31	10		6	4	2	M5x0.8	17	7	8
32	38.5	24.5	48.5	34.5	12	12	7	4	3	M6x1	22	6	9
40	40	26	50	36	12	12	7	4	3	M8x1.25	28	8	10
50	46	28	56	38	15(S≤10.11)	15	9	5	4	M10x1.5	38	8	10.5
63	50	32	60	42	15(S≤10.11)	15	9	5	4	M10x1.5	40	9.5	11.8
80	63	41	73	51	13	20	11	6	5	M14x1.5	45	14.5	14.5
100	75	51	85	61	18	20	12	7	5	M18x1.5	55	20.5	20.5

SDJ Φ12–Φ100

Φ12–16

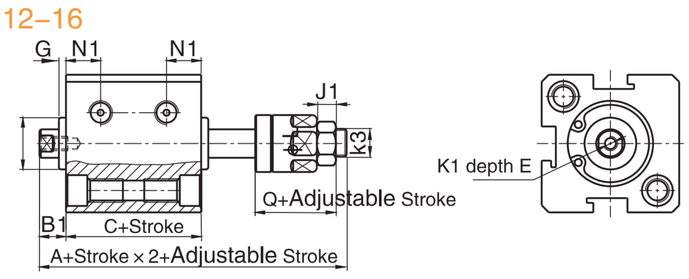

Φ20–100

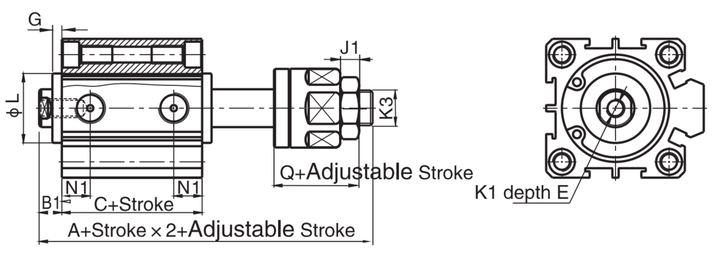

Bore	Basic Type		With Magnet		E		B1	Q	G	J1	K1	K3	L	N1	
	A	C	A	C	S≤10	S>10								S=5	S>5
12	40	17	50	27	6		5	17	1	4	M3x0.5	M5x0.8	10.2	5.5	6.3
16	42.5	18.5	52.5	28.5	6		5.5	17	1.5	4	M3x0.5	M5x0.8	11	6	7.3
20	47.5	19.5	57.5	29.5	8		5.5	21	1.5	5	M4x0.7	M6x1.0	15	6.5	7.5
25	54	21	64	31	10		6	25	2	6	M5x0.8	M8x1.25	17	7	8
32	61.5	24.5	71.5	34.5	12	12	7	27	3	6	M6x1.0	M10x1.25	22	6	9
40	65	26	75	36	12	12	7	29	3	8	M8x1.25	M14x1.5	28	8	10
50	73	28	83	38	15(S≤10.11)	15	9	32	4	11	M10x1.5	M18x1.5	38	8	10.5
63	77	32	87	42	15(S≤10.11)	15	9	32	4	11	M10x1.5	M18x1.5	40	9.5	11.8
80	94	41	104	51	13	20	11	37	5	13	M14x1.5	M22x1.5	45	14.5	14.5
100	105	51	115	61	18	20	12	37	5	13	M18x1.5	M26x1.5	55	20.5	20.5

SDT Φ12–Φ100

Φ12–16

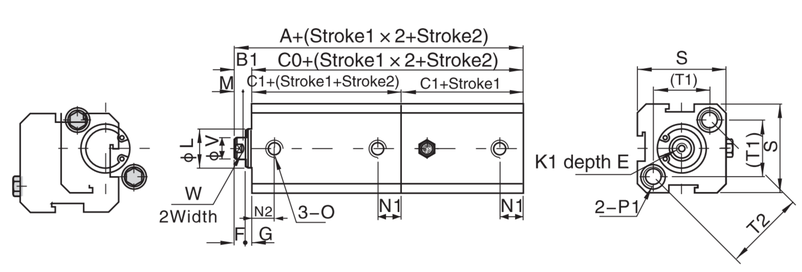

Bore	Basic Type			With Magnet			B1	D	E	F	G	K1	L	M	N1		N2	
	A	C0	C1	A	C0	C1									S=5	S>5	S=5	S>5
12	39	34	17	59	54	27	5	–	6	4	1	M3×0.5	10.2	3	5	5	7.5	7.5
16	42.5	37	18.5	62.5	57	28.5	5.5	–	6	4	1.5	M3×0.5	10	3	5	5.5	8	8
20	44.5	39	19.5	64.5	59	29.5	5.5	36	8	4	1.5	M4×0.7	13	3	5	5.5	8.2	9
25	48	42	21	68	62	31	6	42	10	4	2	M5×0.8	17	3	5.5	5.5	9	9
32	56	49	24.5	76	69	34.5	7	50	12	4	2.4	M6×1	22	3	6.5	9	9	9
40	59	52	26	79	72	36	7	58.5	12	4	3	M8×1.25	28	3	7.5	7.5	9.5	9.5
50	65	56	28	85	76	38	9	71.5	15	5	4	M10×1.5	38	3	8	10.5	8	10.5
63	73	64	32	93	84	42	9	84.5	15	5	4	M10×1.5	40	3	9.5	11	9.5	12
80	93	82	41	113	102	51	11	104	20	6	5	M14×1.5	45	4	14.5	14.5	14.5	14.5
100	114	102	51	134	122	61	12	124	20	7	5	M18×1.5	55	4	20.5	20.5	20.5	20.5

Bore	O	W	P1	P2	P3	P4	R	S	T1	T2	V
12	M5x0.8	5	Φ6.5 Thread: M5X0.8 Through Hole: Φ4.2	–	12	4.5	–	25	16.2	23	6
16	M5x0.8	5	Φ6.5 Thread: M5X0.8 Through Hole: Φ4.2	–	12	4.5	–	29	19.8	28	6
20	M5x0.8	6	Counter bore: Φ6.5 Thread: M5X0.8 Through Hole: Φ4.2	Counter bore: Φ6.5 Through Hole: Φ5.2	14	4.5	2	34	24	–	8
25	M5x0.8	8	Counter bore: Φ8.2 Thread: M6X1.0 Through Hole: Φ4.6	Counter bore: Φ8.2 Through Hole: Φ6.2	15	5.5	2	40	28	–	10
32	1/8"	10	Counter bore: Φ8.2 Thread: M6X1.0 Through Hole: Φ4.6	Counter bore: Φ8.2 Through Hole: Φ6.2	16	5.5	6	44	34	–	12
40	1/8"	14	Counter bore: Φ10.2 Thread: M8X1.25 Through Hole: Φ6.5	Counter bore: Φ10 Through Hole: Φ8.2	20	7.5	6.5	52	40	–	16
50	1/4"	17	Counter bore: Φ11 Thread: M8X1.25 Through Hole: Φ6.5	Counter bore: Φ11 Through Hole: Φ8.5	25	8.5	9.5	62	48	–	20
63	1/4"	17	Counter bore: Φ11 Thread: M8X1.25 Through Hole: Φ6.5	Counter bore: Φ11 Through Hole: Φ8.5	25	8.5	9.5	75	60	–	20
80	3/8"	22	Counter bore: Φ17 Thread: M12X1.75 Through Hole: Φ10.3	Counter bore: Φ17 Through Hole: Φ12.3	25	11	10	94	74	–	25
100	3/8"	27	Counter bore: Φ19 Thread: M14X2 Through Hole: Φ12.2	Counter bore: Φ19 Through Hole: Φ14.2	30	13	10	114	90	–	32

Φ20–100

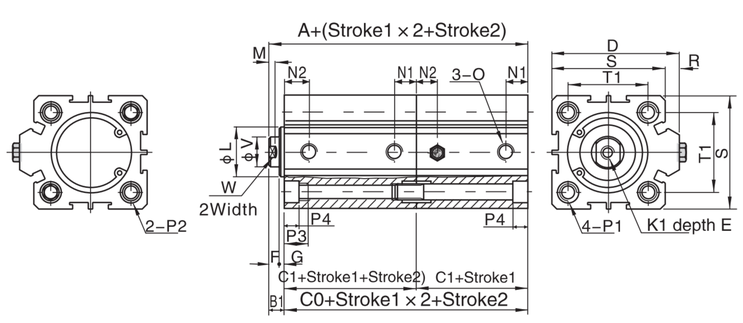

Main Dimension

SDSB/SDSA Φ12–Φ63

SDSB
Φ12, Φ16

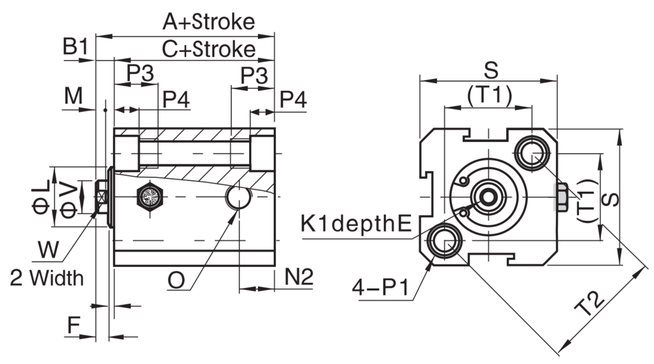

SDSB
Φ20–Φ63

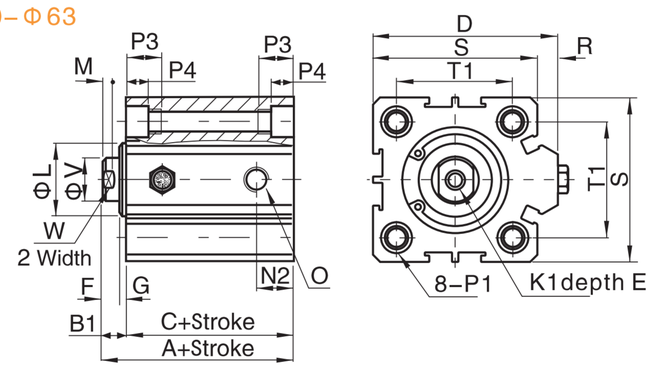

SDSA
Φ12, Φ16

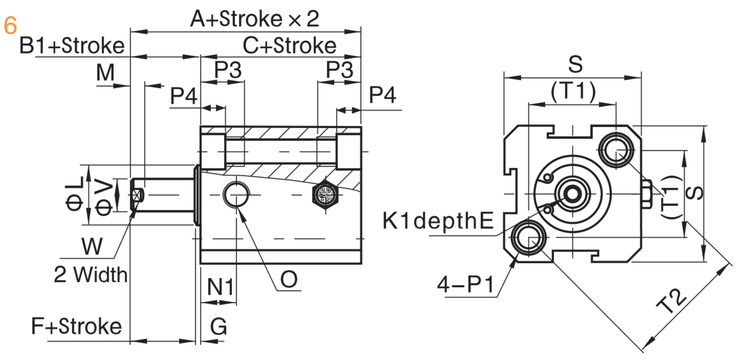

SDSA
Φ20–Φ63

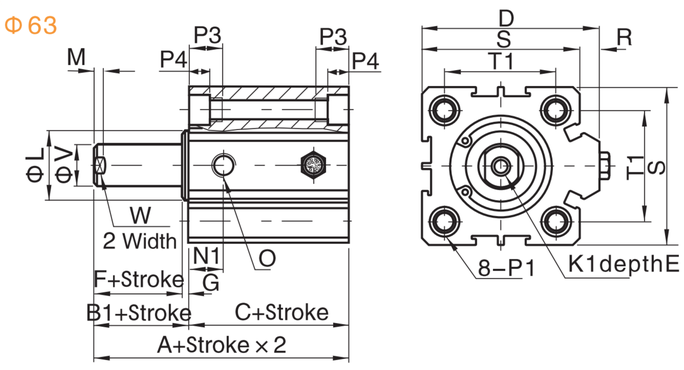

Bore \ Sign	A (standard)		A (With magnet)		C (standard)		C (With magnet)		B1	D	E	F	G	K1	L	M	N1	N2
	St≤10	St>10	St≤10	St>10	St≤10	St>10	St≤10	St>10										
12	32	42	42	52	27	37	37	47	5	–	6	4	1	M3×0.5	10.2	3	7.5	5
16	34	44	44	54	28.5	38.5	38.5	48.5	5.5	–	6	4	1.5	M3×0.5	11	3	8	5.5
20	35	45	45	55	29.5	39.5	39.5	49.5	5.5	36	8	4	1.5	M4×0.7	13	3	9	5.5
25	37	47	47	57	31	41	41	51	6	42	10	4	2	M5×0.8	17	3	9	5.5
32	41.5	51.5	51.5	61.5	34.5	44.5	44.5	54.5	7	50	12	4.5	2.5	M6×1.0	22	3	9	9
40	43	53	53	63	36	46	46	56	7	58.5	12	4	3	M8×1.25	28	3	9.5	7.5
50	47	57	57	67	38	48	48	58	9	71.5	15	5	4	M10×1.5	38	3	10.5	10.5
63	51	61	61	71	42	52	52	62	9	84.5	15	5	4	M10×1.5	40	3	12	11

Bore /Sign	O	R	S	T1	T2	P1	P3	P4	V	W
12	M5×0.8	–	25	16.2	23	Counter bore: Φ6.5 Thread: M5×0.8 Through Hole: Φ4.2	12	4.5	6	5
16	M5×0.8	–	29	19.8	28	Counter bore: Φ6.5 Thread: M5×0.8 Through Hole: Φ4.2	12	4.5	6	5
20	M5×0.8	2	34	24	–	Counter bore: Φ6.5 Thread: M5×0.8 Through Hole: Φ4.2	14	4.5	8	6
25	M5×0.8	2	40	28	–	Counter bore: Φ8.2 Thread: M6×1.0 Through Hole: Φ5.2	15	5.5	10	8
32	1/8"	6	44	34	–	Counter bore: Φ8.2 Thread: M6×1.0 Through Hole: Φ5.2	16	5.5	12	10
40	1/8"	6.5	52	40	–	Counter bore: Φ10.2 Thread: M8×1.25 Through Hole: Φ6.8	20	7.5	16	14
50	1/8"	9.5	62	48	–	Counter bore: Φ11 Thread: M8×1.25 Through Hole: Φ6.8	25	8.5	20	17
63	1/4"	9.5	75	60	–	Counter bore: Φ11 Thread: M8×1.25 Through Hole: Φ6.8	25	8.5	20	17

Male Thread Dimension

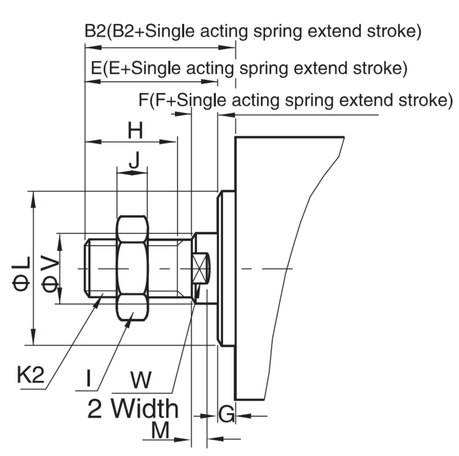

Bore /Sign	B2	E	F	G	H	I
12	17	16	4	1	10	8
16	17.5	16	4	1.5	10	8
20	20.5	19	4	1.5	13	10
25	23	21	4	2	15	12
32	25	22.5	4.5	2.5	15	17
40	35	32	4	3	25	19
50	37	33	5	4	25	27
63	37	33	5	4	25	27
80	44	39	6	5	30	32
100	50	45	7	5	35	36

Bore /Sign	J	K2	L	M	V	W
12	4	M5×0.8	10.2	3	6	5
16	4	M5×0.8	11	3	6	5
20	5	M6×1.0	13	3	8	6
25	6	M8×1.25	17	3	10	8
32	6	M10×1.25	22	3	12	10
40	8	M14×1.5	28	3	16	14
50	11	M18×1.5	38	3	20	17
63	11	M18×1.5	40	3	20	17
80	13	M22×1.5	45	4	25	22
100	13	M26×1.5	55	4	32	27