AEFC/BEFC

FR.L

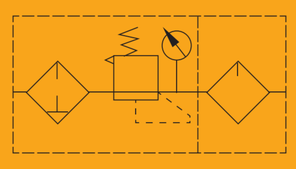

How to Order?

Series No.	Type Code	Body Size	Pressure Gauge Code	Bracket Code	—	Scale Unit	—	Thread Type
AE: Small body size without bowl guard BE: Larger body size with bowl guard	FC: Filter & Regulator +lubricator	2000: 1/4" 2000: 1/4" 3000: 3/8" 4000: 1/2"	Blank: With pressure gauge N: Without pressure gauge	Blank: With bracket J: Without bracket		4: Mpa/Psi(Default) 5: Bar/Psi		Blank: G P: PT T: NPT

Order Example:

AE series two units,2000 body size,with guage,with bracket,Mpa/Psi pressure scale unit,PT thread, ERP code is:AEFC2000–4–P

Main Dimension

AEFC2000

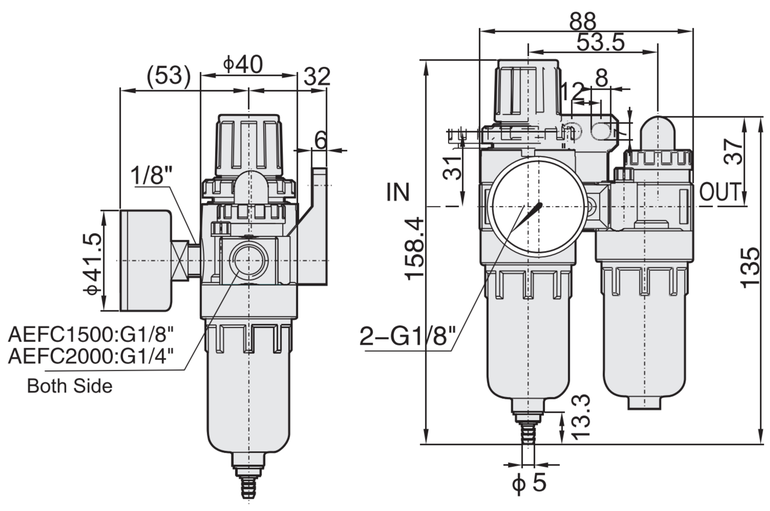

BEFC2000–4000

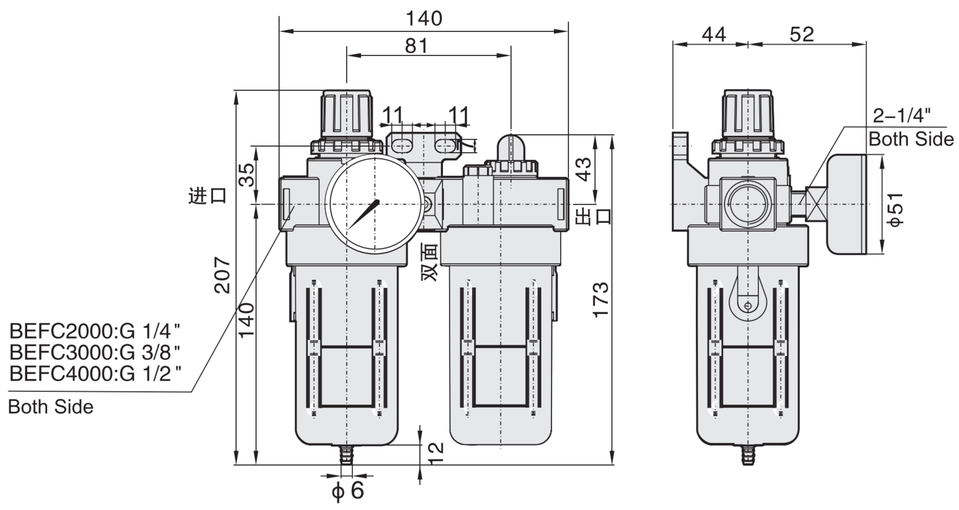

Specifications

Model		AEFC2000	BEFC2000	BEFC3000	BEFC4000
Working medium		Air			
Port size		G1/4	G1/4	G3/8	G1/2
Filter precision		40μm (5, 40 μm is optional)			
Adjusting pressure range (MPa)		0.15~0.85			
Max. adjusting pressure (MPa)		1.0			
Guaranteed pressure (MPa)		1.5			
Working temperature(°C)		5~60			
Filter bowl capacity (CC)		15	60		
Lubricator bowl capacity (CC)		25	90		
Recommend oil		ISO VG32 or equivalent oil			
Weight (g)		500	700		
Components	Filter.Regulator	AEFR2000	BEEF2000	BEFR3000	BEFR4000
	Lubricator	AEL2000	BEL2000	BEL3000	BEL4000