SF
Compact Cylinder

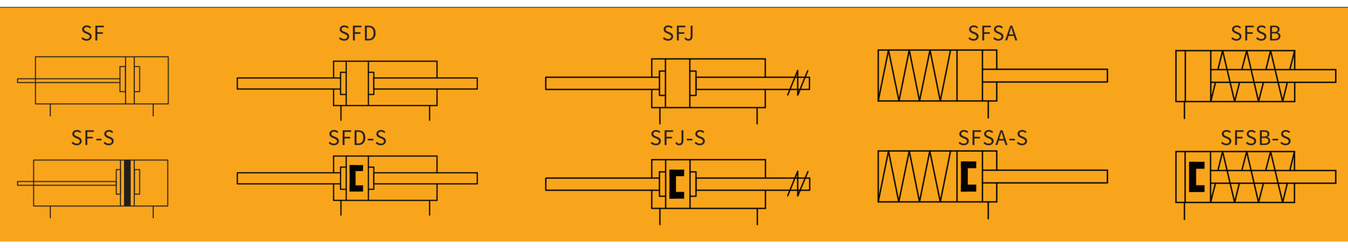

Specifications

Bore Size(mm)	20	25	32	40	50	63	80	100
Acting type	Double Acting/Single Acting							
Working medium	Clean Air(40 μ m filteration)							
Working pressure(MPa)	0.1~1.0(Double acting) / 0.2~1.0(Single acting)(MPa)							
Guaranteed pressure(MPa)	1.5(MPa)							
Working temperature(℃)	–20~70(No freezing)							
Speed range(mm/s)	30~500							
Cushion type	Rubber cushion							
Port size	M5X0.8		G1/8❶					

❶NPT 、PT port size is optional.

How to Order?

Series No	Type No	Bore	X	Stroke	–	Adjustable Stroke	–	Magnet No	–	Piston Rod Thread Type	–	Thread Type
SF	Blank: Basic type D: Double shaft type J: Double shaft and adjustable stroke type SA: Single acting spring extend SB: Single acting spring return	20 25 32 … 100		5 10 15 20 …		10 20 30 40 50 75 100		Blank: No magnet S: With magnet		Blank: Female thread M: Male thread		Blank: G P: PT T: NPT

Order Example:
SF Series basic cylinder, 25mm bore, 50mm stroke, with magnet, male thread on piston rod, G thread
ERP code is: SF25X50–S–M

Optional Accessories

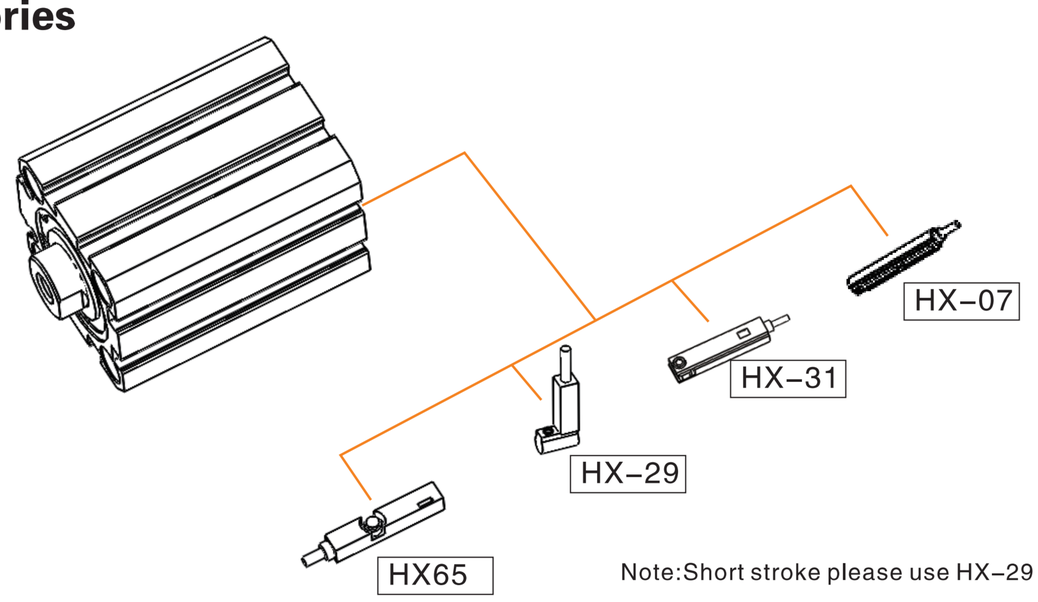

Note:Short stroke please use HX–29 series due to limited space.

Stroke

Bore (mm)		Standard Stroke (mm)	Max. Stroke (mm)
Double Acting	20/25	5 10 15 20 25 30 35 40 45 50 60 80 100 125 150	150
	32~63	5 10 15 20 25 30 35 40 45 50 60 80 100 125 150 175 200	200
	80/100	10 15 20 25 30 35 40 45 50 60 80 100 125 150 175 200	200
Single Acting	20~63	5 10 15 20 25	25

Note:The dimensions of non–std stroke cylinder has the same dimensions as the next longer stroke std. stroke cylinder.
e.g. 27mm stroke cylinder has the same dimensions of 30 std. stroke cylinder.
When ordering stroke is larger than the maximum stroke, please contact us.

E·MC®

Internal Structure

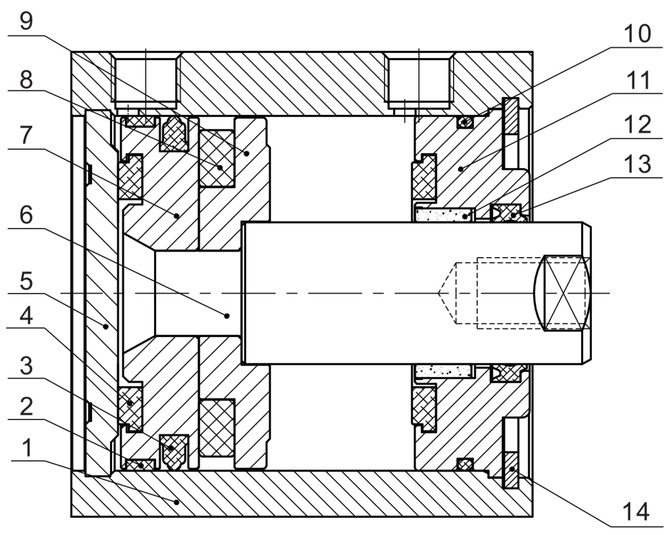

No.	Part Name	20	25	32	40	50	63	80	100
1	Barrel	Aluminum alloy							
2	Wear ring	No			PTEE				
3	Piston seal	NBR							
4	Anti–bump cushion	TPU				NBR			
5	Rear cover	Aluminum alloy							
6	Piston rod	Stainless steel		Carbon steel					
7	Piston	Aluminum alloy							
8	Magnet	RbFeB			Plastic				
9	Magnet base	Aluminum alloy							
10	O–ring	NBR							
11	Head cover	Aluminum alloy							
12	Bearing	No			Bronze powder				
13	Piston rod seal	TPU							
14	C type retainer ring	Spring steel							

Main Dimension

Φ20、Φ25

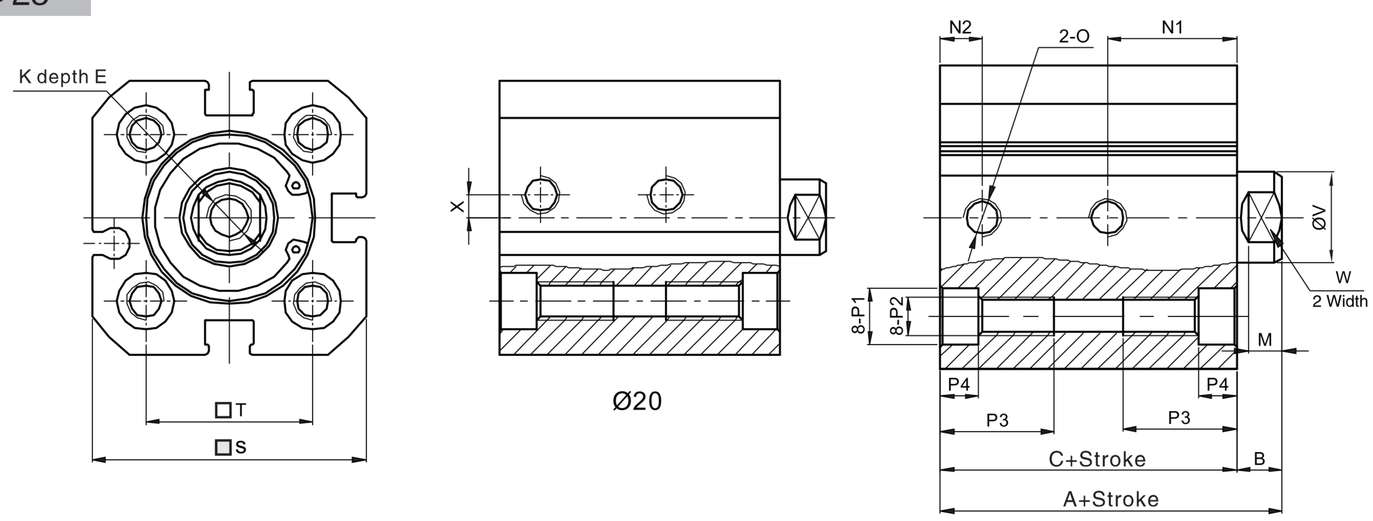

Bore\Sign	A	C	N1	N2	B	E	M	K	O	P1	P2	P3	P4	S	T	X	V	W
20	43	37	15	5.5	6	10	4	M6X1.0	M5X0.8	Φ7.3	M5X0.8	15	5	36	22	3	10	8
25	45	39	17	5.5	6	10	4.5	M6X1.0	M5X0.8	Φ7.3	M5X0.8	15	5	40	26	–	12	10

Φ32、Φ40

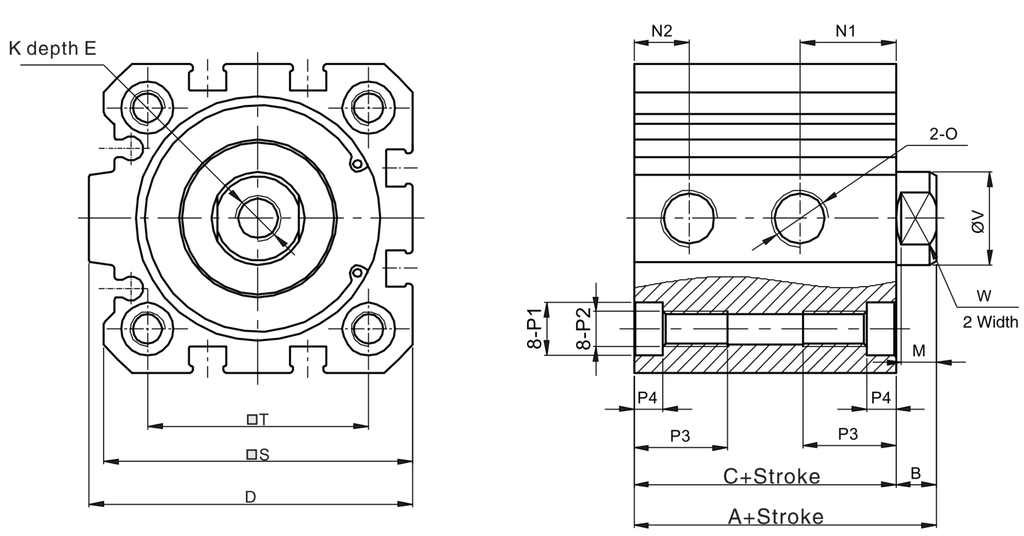

Bore\Sign	A	C	N1	N2	B	D	E	M	K
32	51	44	15	8	7	48	12	6	M8X1.25
40	52	45	16.5	9.5	7	55.5	12	6	M8X1.25

Bore\Sign	O	P1	P2	P3	P4	S	T	V	W
32	1/8"	Φ9	M6X1.0	16	5	45.5	32.5	16	14
40	1/8"	Φ9	M6X1.0	16	5	53	38	16	14

Φ50~Φ100

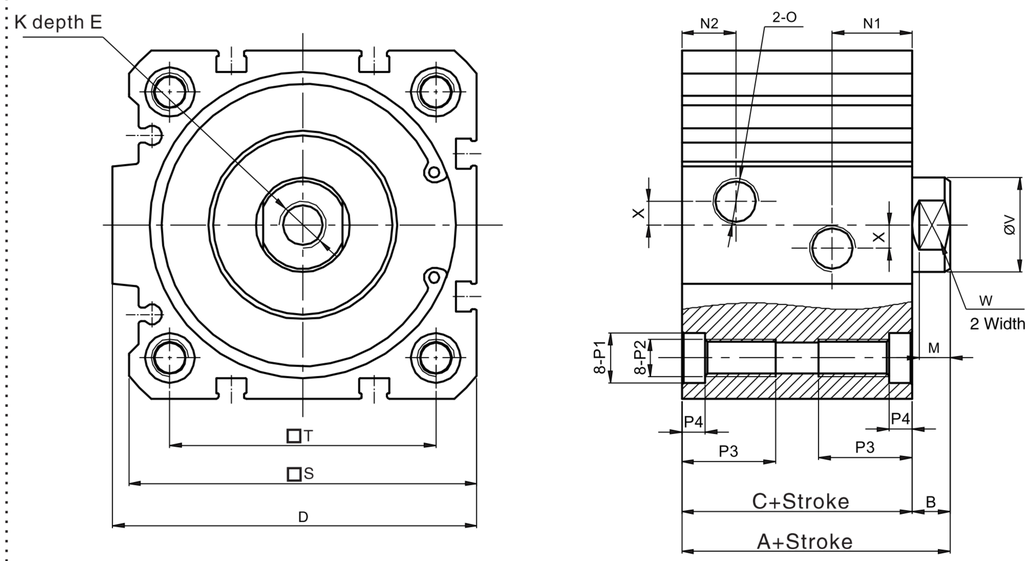

Bore\Sign	A	C	N1	N2	B	D	E	M	K
50	53	45	16	10.5	8	65.5	16	6.5	M10X1.5
63	57	49	17	11.5	8	77.5	16	6.5	M10X1.5
80	64	54	17	15	10	95.5	21	8.5	M12X1.75
100	77	67	24.5	19	10	113.5	21	8	M12X1.75

Bore\Sign	O	P1	P2	P3	P4	S	T	X	V	W
50	1⅞	10.5	M8X1.25	20	5	63	46.5	4	20	17
63	1⅞	10.5	M8X1.25	20	5	74	56.5	5	20	17
80	1⅞	13.7	M10X1.5	25	5	92	72	10	25	22
100	1⅞	13.7	M10X1.5	25	5	109	89	14	32	27

Note: With magnet and no magnet,the dimensions are same.

Main Dimension

SFD

Φ20、Φ25

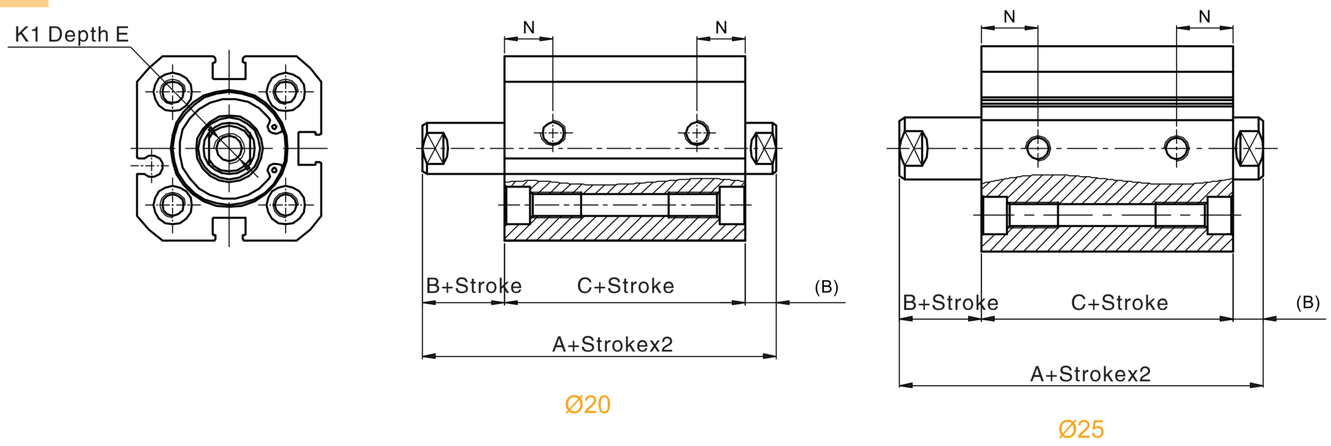

Bore\Sign	A	B	C	N	K1	E
20	49	6	37	9.5	M6X1.0	10
25	51	6	39	11	M6X1.0	10

Φ32、Φ40

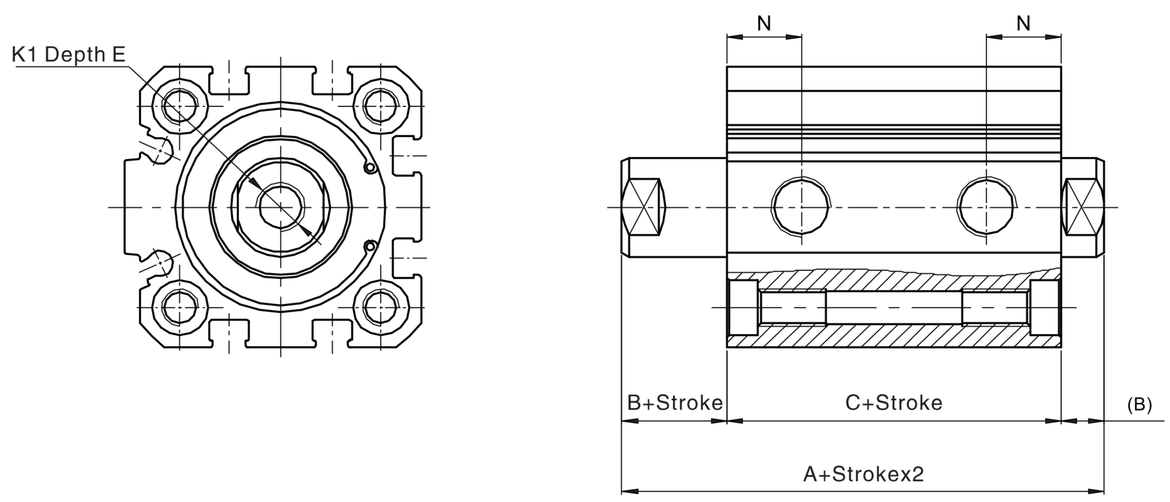

Bore\Sign	A	B	C	N	K1	E
32	58	7	44	12	M8X1.25	12
40	59	7	45	13	M8X1.25	12

Φ50~Φ100

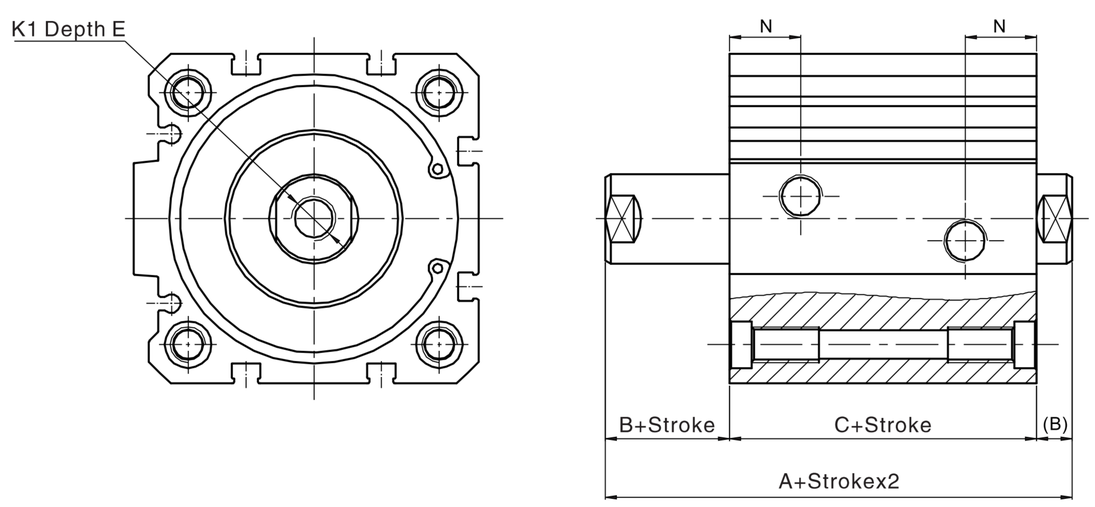

Bore\Sign	A	B	C	N	K1	E
50	61	8	45	13.5	M10X1.5	12(5≤S<15)/16(S≥15)
63	65	8	49	16	M10X1.5	12(5≤S<15)/16(S≥15)
80	74	10	54	16	M12X1.75	14(10≤S<25)/21(S≥25)
100	87	10	67	20.5	M12X1.75	21

Note:Not marked dimension,the same as standard type.Parts of double shaft male thread type,please refer to standard dimension.

E·MC®

◎ Main Dimension

SFJ

Φ20、Φ25

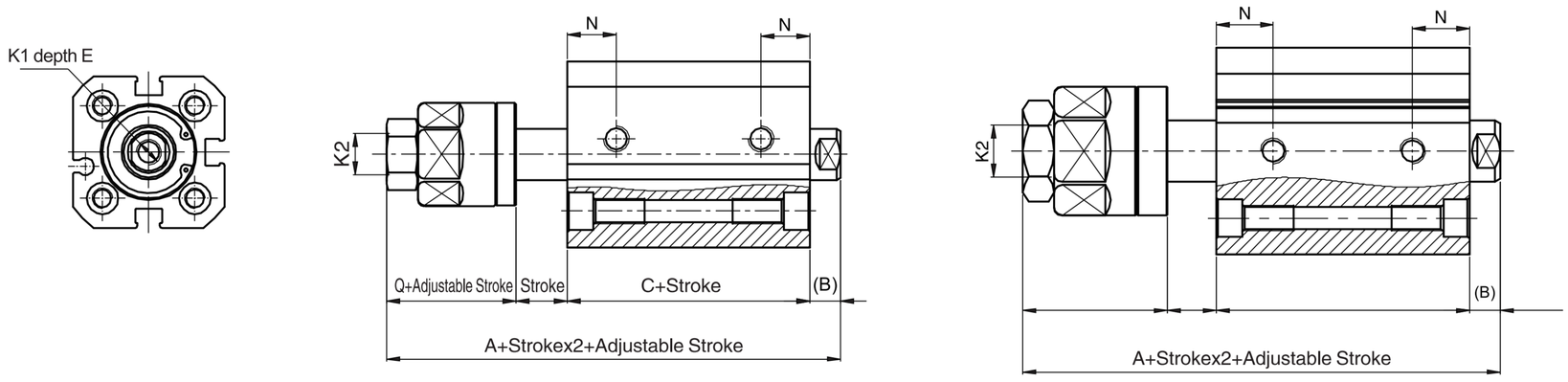

Ø20 Ø25

Bore\Sign	A	B	C	Q	N	K1	E	K2
20	68	6	37	25	9.5	M6X1.0	10	M8X1.25
25	72.5	6	39	28	11	M6X1.0	10	M10X1.25

Φ32、Φ40

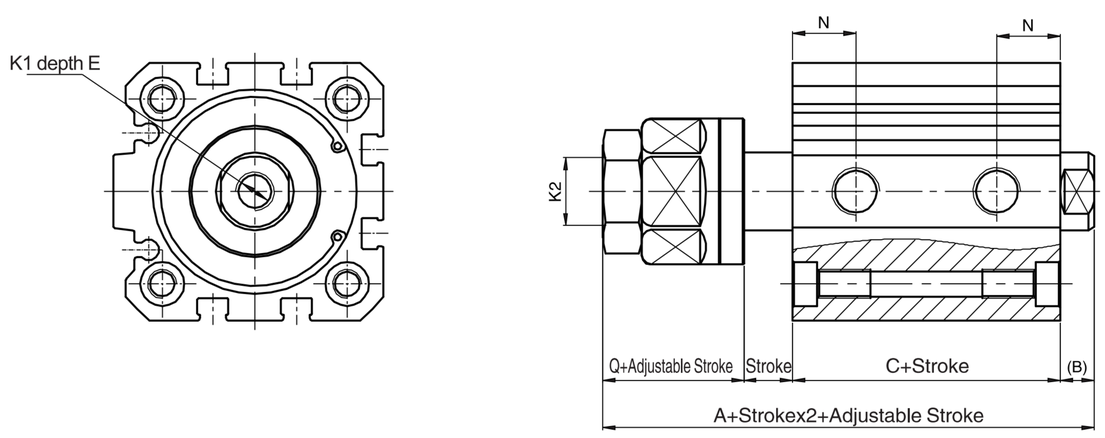

Bore\Sign	A	B	C	Q	N	K1	E	K2
32	79	7	44	30	12	M8X1.25	12	M14X1.5
40	81	7	45	29	13	M8X1.25	12	M14X1.5

Φ50~Φ100

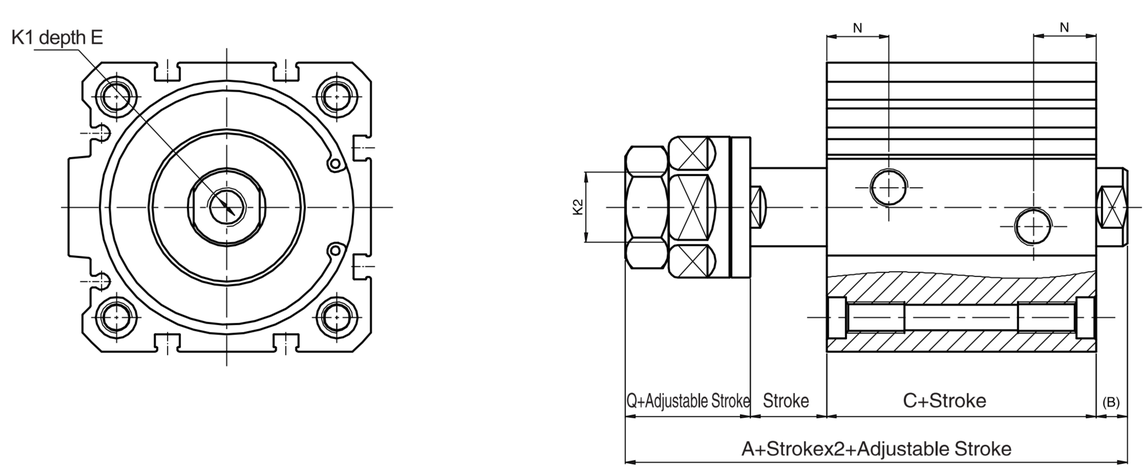

Bore\Sign	A	B	C	Q	N	K1	E	K2
50	85	8	45	32	13.5	M10X1.5	12(5≤S<15)/16(S≥15)	M18X1.5
63	88.5	8	49	32	16	M10X1.5	12(5≤S<15)/16(S≥15)	M18X1.5
80	101	10	54	37	16	M12X1.75	14(10≤S<25)/21(S≥25)	M22X1.5
100	113.5	10	67	37	20.5	M12X1.75	21	M26X1.5

Note:Not marked dimension,the same as standard type.Parts of double shaft male thread type,please refer to standard dimension.

Main Dimension

SFSB

Φ20、Φ25

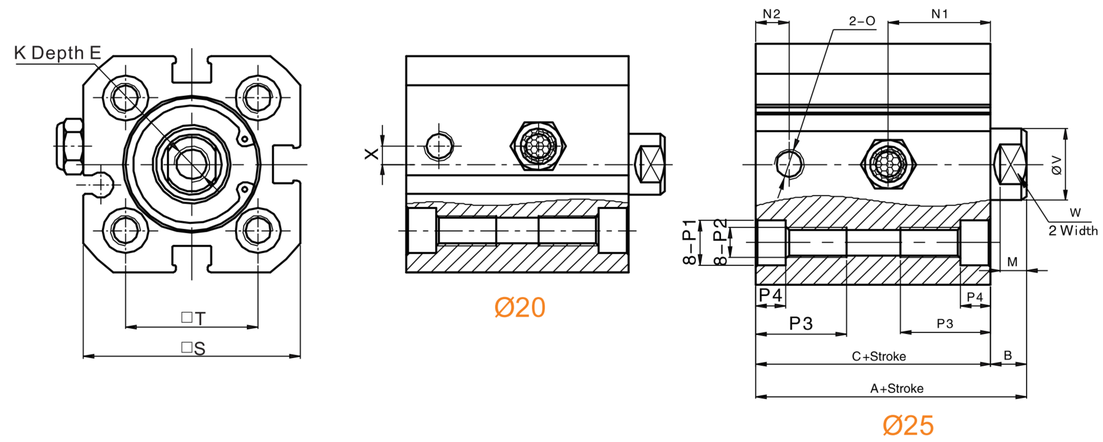

Bore\Sign	A	C	N1	N2	B	E	M	K	O	P1	P2	P3	P4	S	T	X	V	W
20	43	37	15	5.5	6	10	4	M6X1.0	M5X0.8	Φ7.3	M5X0.8	15	5	36	22	3	10	8
25	45	39	17	5.5	6	10	4.5	M6X1.0	M5X0.8	Φ7.3	M5X0.8	15	5	40	26	–	12	10

Φ32、Φ40

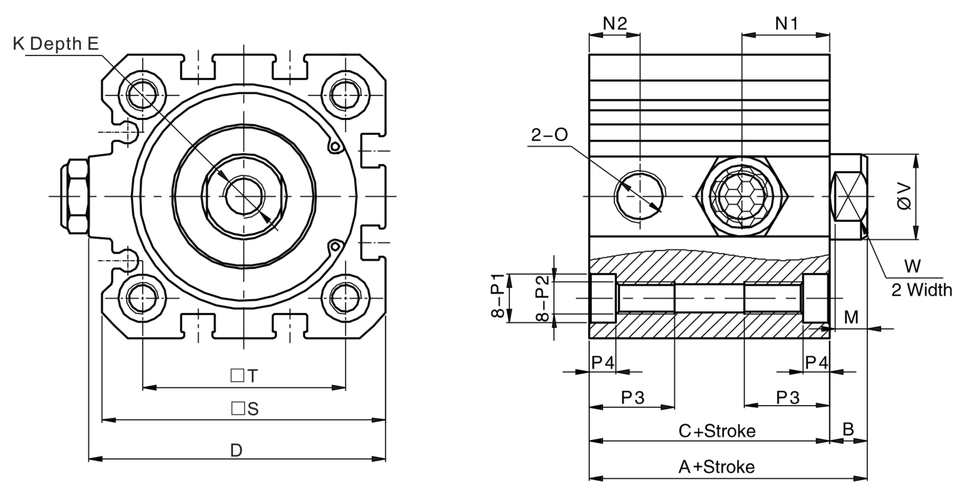

Bore\Sign	A	C	N1	N2	B	D	E	M	K	O	P1	P2	P3	P4	S	T	V	W
32	51	44	15	8	7	48	12	6	M8X1.25	1/8"	Φ9	M6X1.0	16	5	45.5	32.5	16	14
40	52	45	16.5	9.5	7	55.5	12	6	M8X1.25	1/8"	Φ9	M6X1.0	16	5	53	38	16	14

Φ50~Φ100

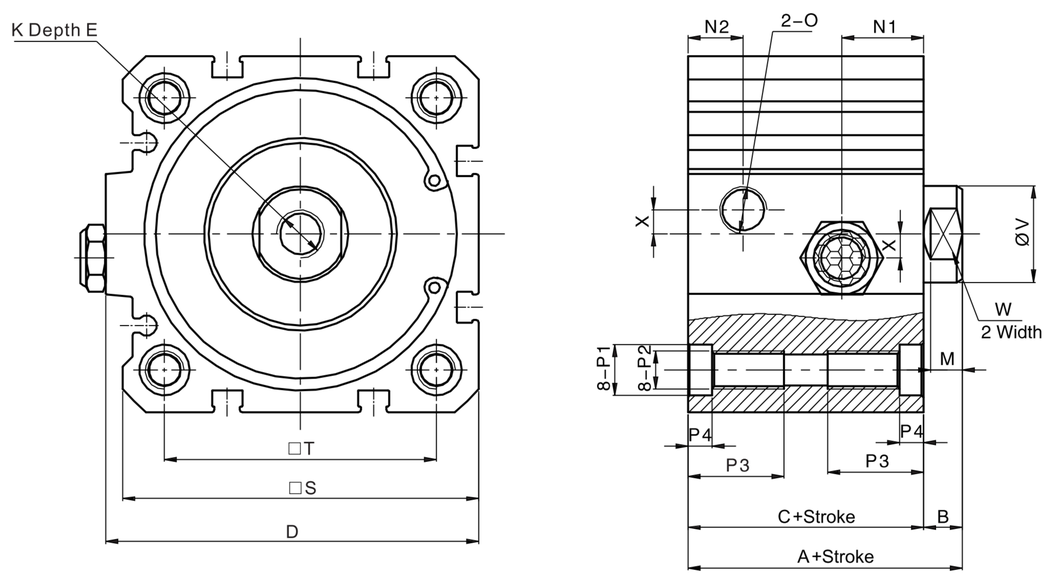

Bore\Sign	A	C	N1	N2	B	D	E	M	K	O	P1	P2	P3	P4	S	T	X	V	W
50	53	45	16	10.5	8	65.5	16	6.5	M10X1.5	1/8"	Φ 10.5	M8X1.25	20	5	63	46.5	4	20	17
63	57	49	17	11.5	8	77.5	16	6.5	M10X1.5	1/8"	Φ 10.5	M8X1.25	20	5	74	56.5	5	20	17

Note：With magnet and without magnet, the dimensions are same.

E·MC®

◎ Main Dimension

SFSA

Φ20、Φ25

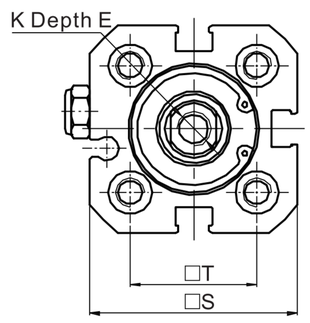

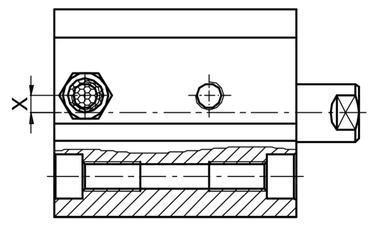

Ø20

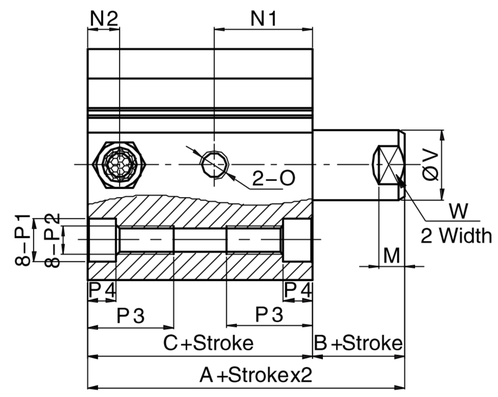

Ø25

Bore\Sign	A	C	N1	N2	B	E	M	K	O	P1	P2	P3	P4	S	T	X	V	W
20	43	37	15	5.5	6	10	4	M6X1.0	M5X0.8	Φ7.3	M5X0.8	15	5	36	22	3	10	8
25	45	39	12	5.5	6	10	4.5	M6X1.0	M5X0.8	Φ7.3	M5X0.8	15	5	40	26	–	12	10

Φ32、Φ40

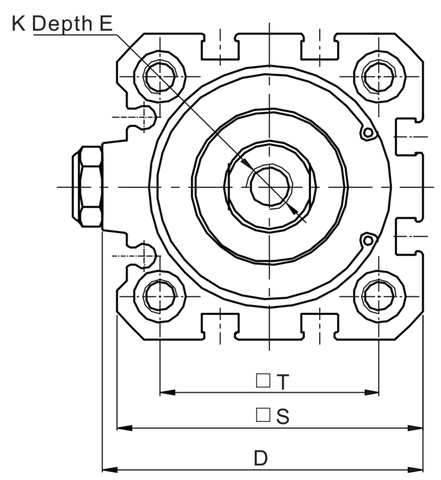

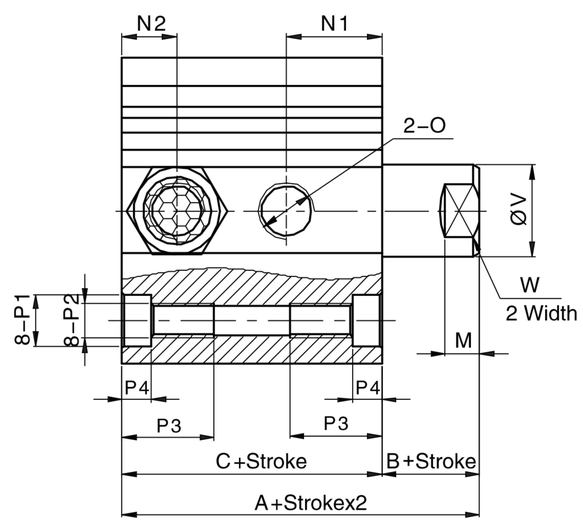

Bore\Sign	A	C	N1	N2	B	D	E	M	K	O	P1	P2	P3	P4	S	T	V	W
32	51	44	15	8	7	48	12	6	M8X1.25	1/8"	Φ9	M6X1.0	16	5	45.5	32.5	16	14
40	52	45	16.5	9.5	7	55.5	12	6	M8X1.25	1/8"	Φ9	M6X1.0	16	5	53	38	16	14

Φ50~Φ100

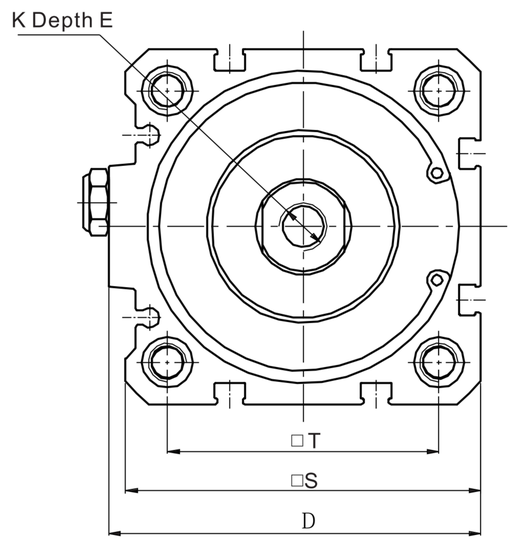

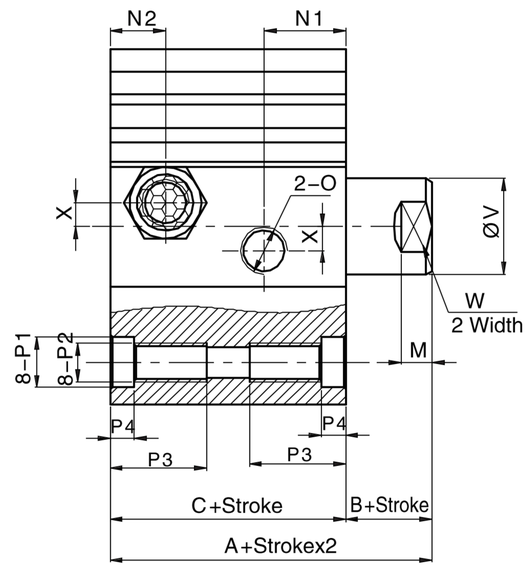

Bore\Sign	A	C	N1	N2	B	D	E	M	K	O	P1	P2	P3	P4	S	T	X	V	W
50	53	45	16	10.5	8	65.5	16	6.5	M10X1.5	1/8"	Φ10.5	M8X1.25	20	5	63	46.5	4	20	17
63	57	49	17	11.5	8	77.5	16	6.5	M10X1.5	1/8"	Φ10.5	M8X1.25	20	5	74	56.5	5	20	17

Note：With magnet and without magnet, the dimensions are same.

Male Thread Dimension

SF、SFD、SFJ、SFSB

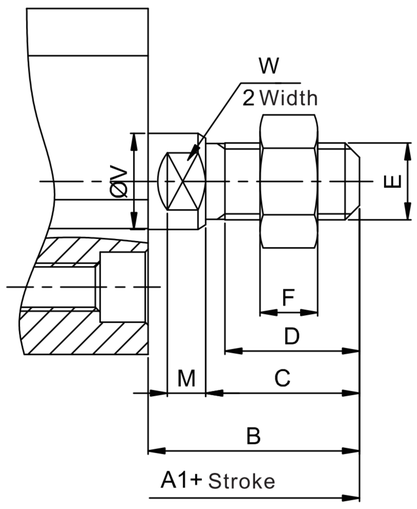

Bore\Sign	A1	B	C	D	E	F	M	V	W
20	59	22	16	14	M8X1.25	6	4	10	8
25	61	22	16	14	M8X1.25	6	4.5	12	10
32	70	26	19	16.5	M10X1.25	6	6	16	14
40	71	26	19	16.5	M10X1.25	6	6	16	14
50	75	30	22	19.5	M12X1.25	7	6.5	20	17
63	79	30	22	19.5	M12X1.25	7	6.5	20	17
80	92	38	28	25	M16X1.5	8	8.5	25	22
100	105	38	28	25	M16X1.5	8	8	32	27

Note：For SFSB cylinder, Φ80 and Φ100 are not optional.

SFSA

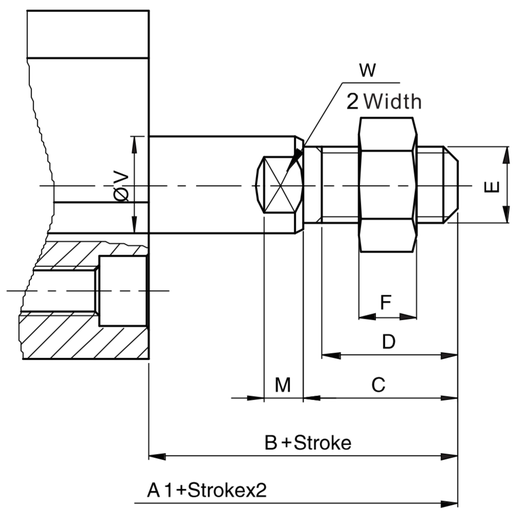

Bore\Sign	A1	B	C	D	E	F	M	V	W
20	59	22	16	14	M8X1.25	6	4	10	8
25	61	22	16	14	M8X1.25	6	4.5	12	10
32	70	26	19	16.5	M10X1.25	6	6	16	14
40	71	26	19	16.5	M10X1.25	6	6	16	14
50	75	30	22	19.5	M12X1.25	7	6.5	20	17
63	79	30	22	19.5	M12X1.25	7	6.5	20	17

Installation Note

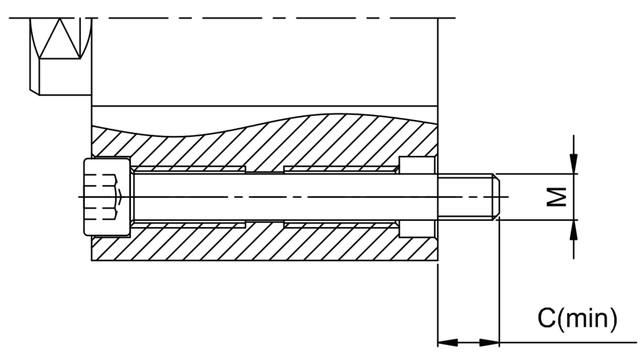

Bore\Sign	M	C
20	M4X0.7	6
25	M4X0.7	6
32	M5X0.8	7
40	M5X0.8	7
50	M6X1.0	9
63	M6X1.0	9
80	M8X1.25	12
100	M8X1.25	12