# AEF/BEF

Fillter

## How to Order?

| Series No. | Type Code | Body Size | Bracket Code — | Thread Type |
|---|---|---|---|---|
| AE: Small body size without bowl guard<br>BE: Larger body size with bowl guard | F: Filter | 1500: 1/8"<br>2000: 1/4"<br>2000: 1/4"<br>3000: 3/8"<br>4000: 1/2" | Blank: With bracket<br>J: No bracket | Blank: G<br>P: PT<br>T: NPT |

Order Example:

AE series filter, 1/4" body size, with bracket, PT thread, ERP code is: AEF2000–P

## Main Dimension

AEF1500/2000

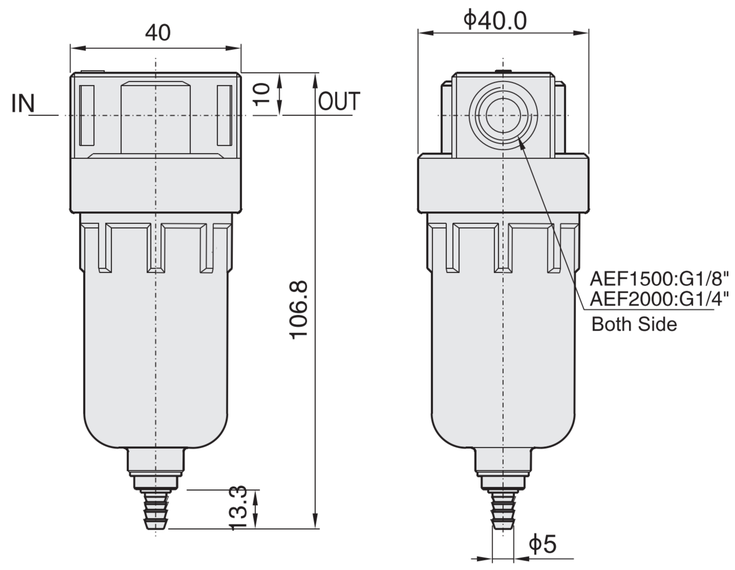


BEF2000–4000

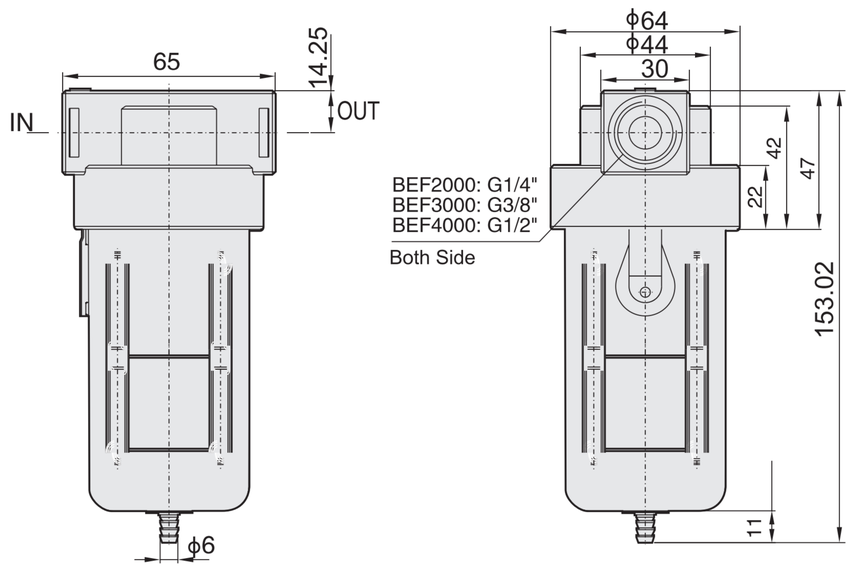


## Specifications

| Model | AEF1500 | AEF2000 | BEF2000 | BEF3000 | BEF4000 |
|---|---|---|---|---|---|
| Working medium | Air | | | | |
| Port size | G1/8 | G1/4 | G1/4 | G3/8 | G1/2 |
| Filter precision | 40 μ m(5, 50 μ m is optional) | | | | |
| Working pressure (MPa) | 0.15~1.0 | | | | |
| Guaranteed. pressure (MPa) | 1.5 | | | | |
| Working temperature(°C) | 5~60 | | | | |
| Filter bowl capacity (CC) | 15 | | 60 | | |
| Weight (g) | 140 | | 330 | | |