QSC

Flow Control Valve (Precise Type)

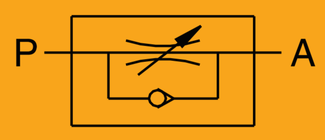

Specifications

Model (mm)		QSC–06	QSC–08	QSC–10	QSC–15
Working medium		Clean air(After 40 μ m filteration)			
Working Pressure (Mpa)		0.05~1.0			
Guaranteed pressure (Mpa)		1.5			
Working temperature(℃)		–20~70			
Port size ❶		1/8"	1/4"	3/8"	1/2"
Standard rated flow	P→A	0~350	0~860	0~1650	0~1900
The amount (L/min)	A→P	300~450	760~890	1320~1650	1610~1990
Weight(g)		33	50	128	119

❶ G、PT、 NPT thread type is optional.

How to Order?

Series No.	Port Size	—	Thread Type
QSC:Flow control valve (precise type)	06:1/8" 08:1/4" 10:3/8" 15:1/2"		Blank: G P : PT T : NPT

Order Example:

QSC series flow control valve, 1/4" port size, G thread, the ERP code is QSC–08

Product Features

* Compact structure and high precision.
* Install in several positions to facilitate , installation and application.
* Apply to exhaust throttle, widely used for cylinder speed adjustment.

Main Dimension

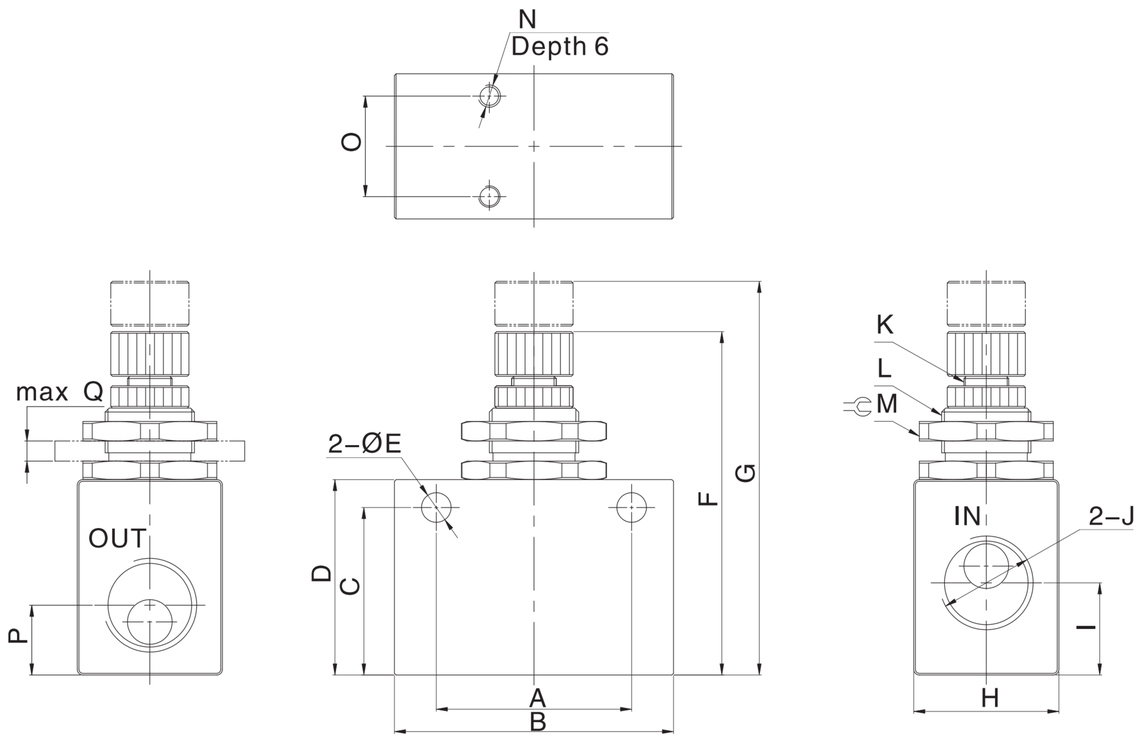

Model	A	B	C	D	E	F	G	H	I
QSC-06	22	32	20	25	4.3	46	51	15	8.5
QSC-08	26	36	23	27	4.3	51	57.5	18	13.3
QSC-10	35	50	30	35	5.3	62.5	71.5	26	16.5
QSC-15	35	50	30	35	5.3	62.5	71.5	26	16.5
Model	J	K	L	M	N	O	P	Q	
QSC-06	1/8	M5x0.4	M12x0.75	14	––	––	8.5	3	
QSC-08	1/4	M6X0.5	M14X1	17	––	––	9	5	
QSC-10	3/8	M8x0.75	M16X1	24	M4X0.7	18	12.5	6	
QSC-15	1/2	M8X0.75	M16X1	24	M4X0.7	18	12.5	6	

Internal Structure

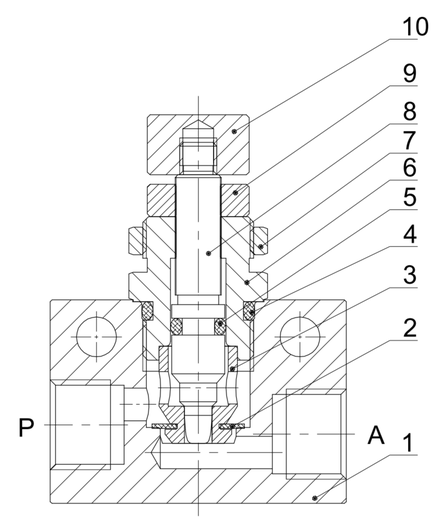

No.	Name
1	Valve body
2	Diaphragm
3	Throttle body
4	O–ring
5	O–ring
6	Throttle sheath
7	Fixed nut
8	Throttle column
9	Lock nut
10	Adjustment cap

Flow Chat

QSC-06/08 P→A Flow Chart (Inlet pressure0.6 MPa)

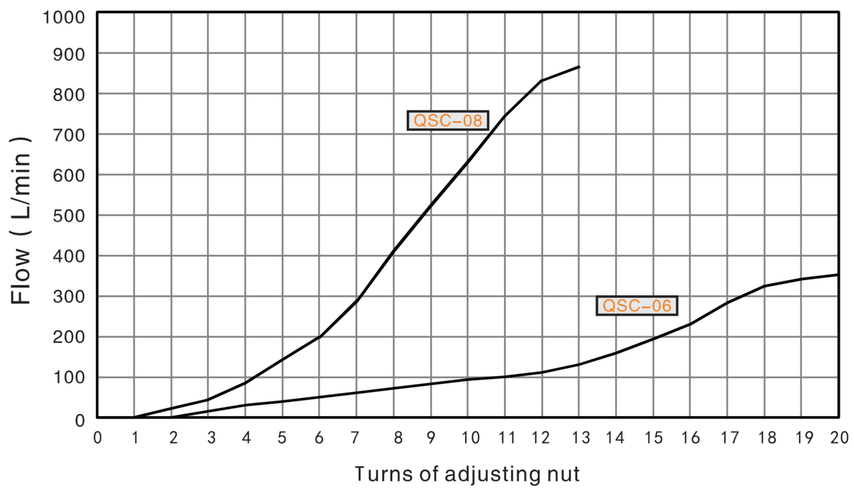

QSC-06/08 A→P Flow Chart (Inlet pressure0.6 MPa)

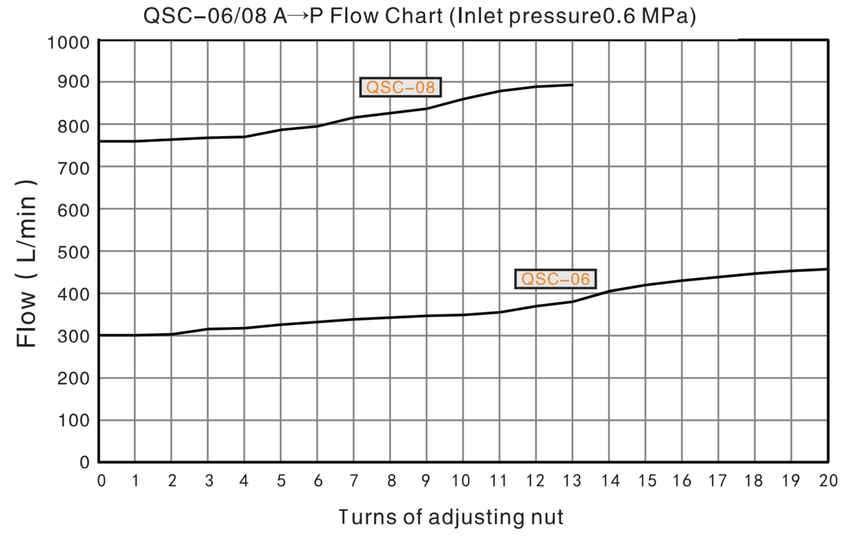

QSC-10/15 P→A Flow Chart (Inlet pressure0.6 MPa)

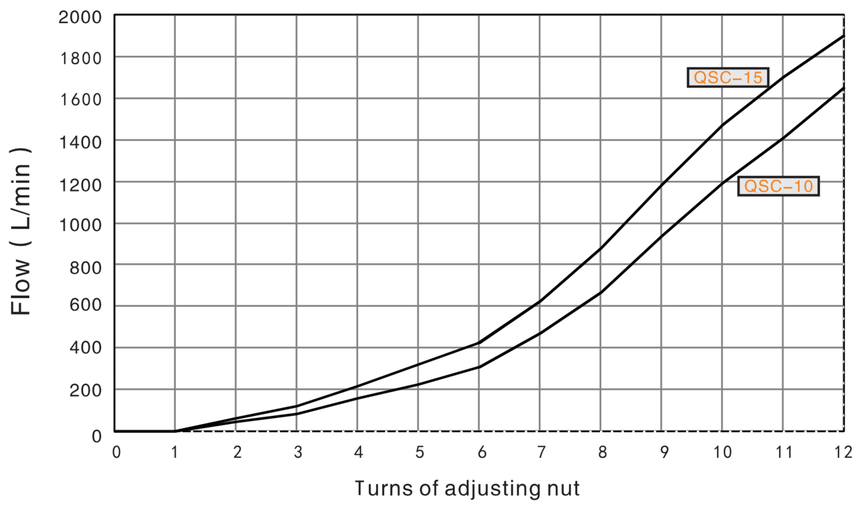
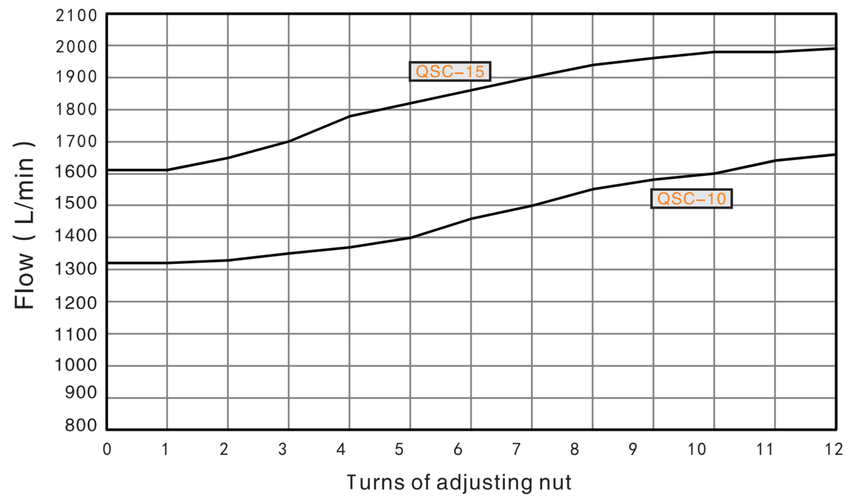
QSC-10/15 A→P Flow Chart (Inlet pressure0.6 MPa)