# PM
## Bracket

### Dimension

PM series bracket (TBC、LBC Cylinder)

PM–6 PM–8 PM–10 PM–12 PM–16

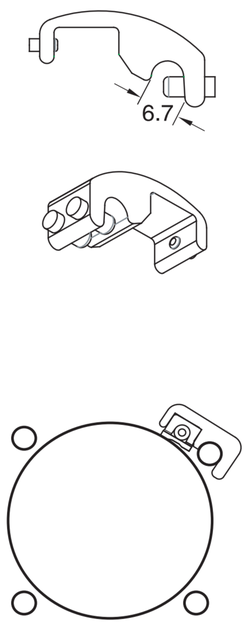


Suitable for
TBC32/40/50 LBC32/40
Diameter of tie-rod Φ5~Φ6

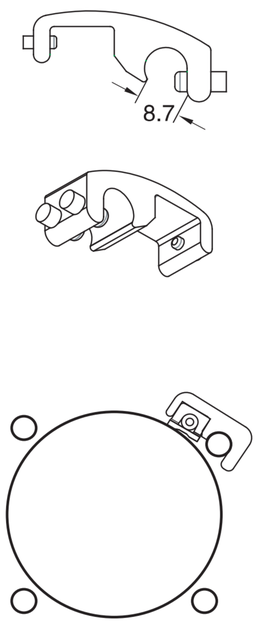


Suitable for
TBC63 LBC50/63
Diameter of tie-rod Φ7~Φ8

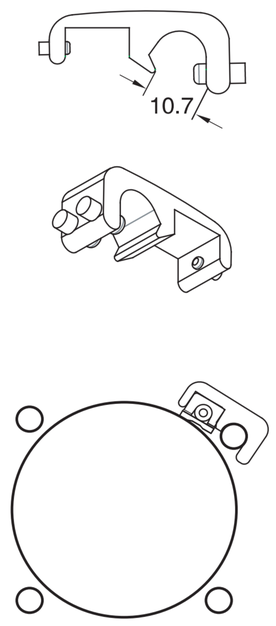


Suitable for
TBC80/100 LBC80/100
Diameter of tie-rod Φ8.5~Φ10

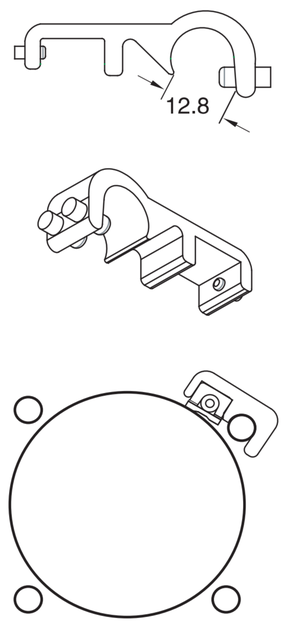


Suitable for
TBC125 LBC125
Diameter of tie-rod Φ10.5~Φ12

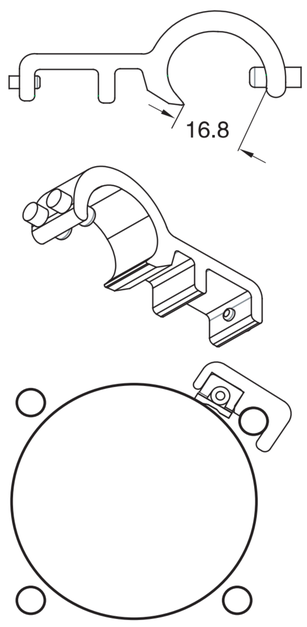


Suitable for
TBC160 LBC160/200
Diameter of tie-rod Φ14~Φ16