VP
One-Way Valve

Product Features

- Adopt built-in spring structure, rotation can be realized in all directions.
- With various specification and type, could meet many installation size requirements.
- Product built-in filter device, prevent product clogging effectively.

How to Order?

Series No.	Specification	—	Vacumm Ejector Side Thread Specification	—	Pad Side Thread Specification
VP：VP Series	03：Aperture port size0.3mm (Without the G1/8 thread) 05：Aperture port size0.5mm 07：Aperture port size0.7mm 10：Aperture port size1.0mm (Without the M5 thread)		A05M：External thread M5x0.8 A05F：Internal thread M5x0.8 A18M：External thread G1/8 A18F：Internal thread G1/8		B05M：External thread M5x0.8 B05F：Internal thread M5x0.8 B18M：External thread G1/8 B18F：Internal thread G1/8

Order Example: VP Series One–Way Valve, aperture port size 0.3mm(without the G1/8 thread), vacuum ejector side thread M5X0.8, pad side internal thread M5X0.8. Order code is: VP03–A05M–B05F

Note: Both thread sides can only choose the same specifications, but do not limit the female and male thread. Example:VP03-A18M-B18F。

Performance Parameters

Throttle Diameter (mm)	0.3	0.5	0.7	0.5	0.7	1.0
Fluid	Air					
Maximum Operating Working Pressure (MPa)	0~0.7					
Maximum Operating Vacuum Pressure Range (kPa)	-100~0					
Ambient and Fluid Temperatures(℃)	0~60 (No freezing)					
Nominal Filtration Rating (μm)	40					
Minimum Flow Rate (NL/min)	3	5	8	5	8	16

Main Dimension

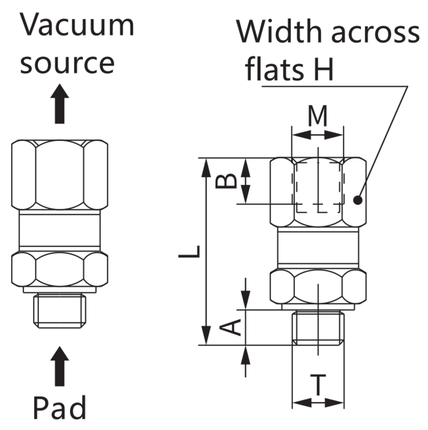

Model No.	M(mm)	T(mm)	L(mm)	A(mm)	B(mm)	H(mm)	Weight(g)
VP03-A05F-B05M	M5x0.8	M5x0.8	18.1	3.4	4.5	8	6
VP05-A05F-B05M							
VP07-A05F-B05M							
VP05-A18F-B18M	G1/8	G1/8	27.6	5.1	8	13	23
VP07-A18F-B18M							
VP10-A18F-B18M							

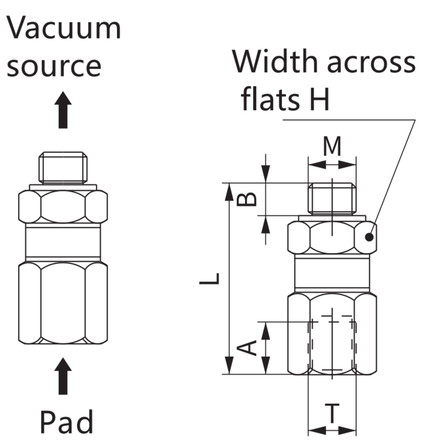

Model No.	M(mm)	T(mm)	L(mm)	B(mm)	A(mm)	H(mm)	Weight(g)
VP03-A05M-B05F	M5x0.8	M5x0.8	20	3.4	5.5	8	7
VP05-A05M-B05F							
VP07-A05M-B05F							
VP05-A18M-B18F	G1/8	G1/8	28.5	5.1	8	13	24
VP07-A18M-B18F							
VP10-A18M-B18F							

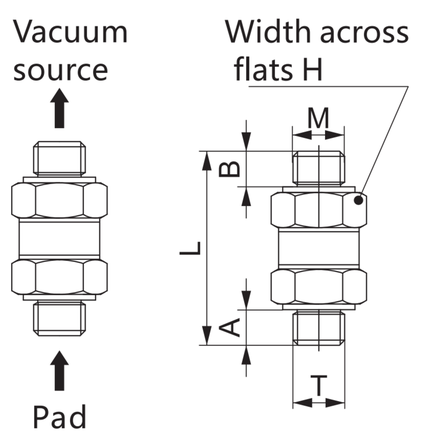

Model No.	M(mm)	T(mm)	L(mm)	B(mm)	A(mm)	H(mm)	Weight(g)
VP03-A05M-B05M	M5x0.8	M5x0.8	18.8	3.4	3.4	8	6
VP05-A05M-B05M							
VP07-A05M-B05M							
VP05-A18M-B18M	G1/8	G1/8	26.2	5.1	5.1	13	22
VP07-A18M-B18M							
VP10-A18M-B18M							

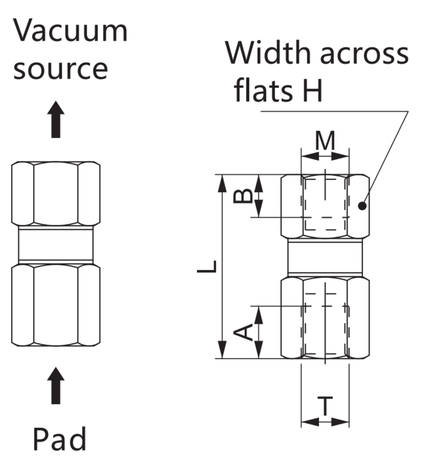

Model No.	M(mm)	T(mm)	L(mm)	B(mm)	A(mm)	H(mm)	Weight(g)
VP03-A05F-B05F	M5x0.8	M5x0.8	19.3	5.5	5.5	8	7
VP05-A05F-B05F							
VP07-A05F-B05F							
VP05-A18F-B18F	G1/8	G1/8	30	8	8	13	24
VP07-A18F-B18F							
VP10-A18F-B18F							