EIF
Filter

Specifications

Model	EIF2000	EIF3000	EIF4000	EIF5000
Proof pressure(MPa)	1.5			
Working Pressure Range(MPa)	0.15~1.0			
Working temperature(℃)	–5~60			
Filter precision	25μm(5 μm is optional)			
Bowl material	Polycarbonate			
Bowl guard	None	Available		
Entrance pressure(MPa)	0.15~1.0			

Model	Specifications			Drain function	Auto drain model
	*Rated flow (L/min)	*Port size (G)	Bowl capacity (cm^3)		
EIF2000–01	1222	1/8	15	Manual drain	EIF2000–01D
EIF2000–02	1278	1/4			EIF2000–02D
EIF3000–02	2006	1/4	20		EIF3000–02D
EIF3000–03	2148	3/8			EIF3000–03D
EIF4000–04	5430	1/2	45	Zero pressure drain/Manual drain	EIF4000–04D
EIF5000–06	8200	3/4	130		EIF5000–06D
EIF5000–10	8500	1			EIF5000–10D

* The above information is based on 6.3 Bar supply pressure and 1.0 Bar set pressure

* NPT,PT port size is optional

Main Dimension

EIF2000

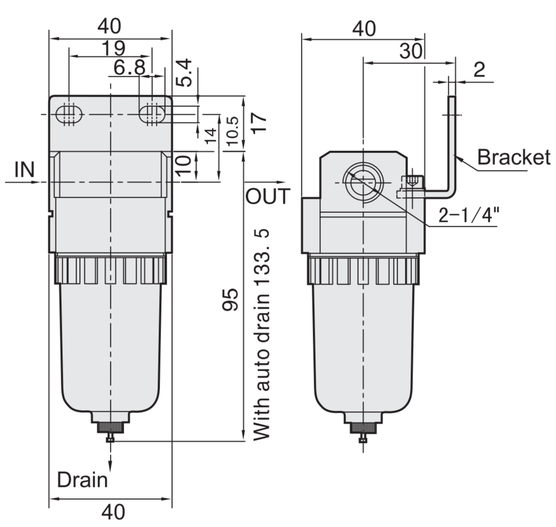

EIF3000–EIF4000

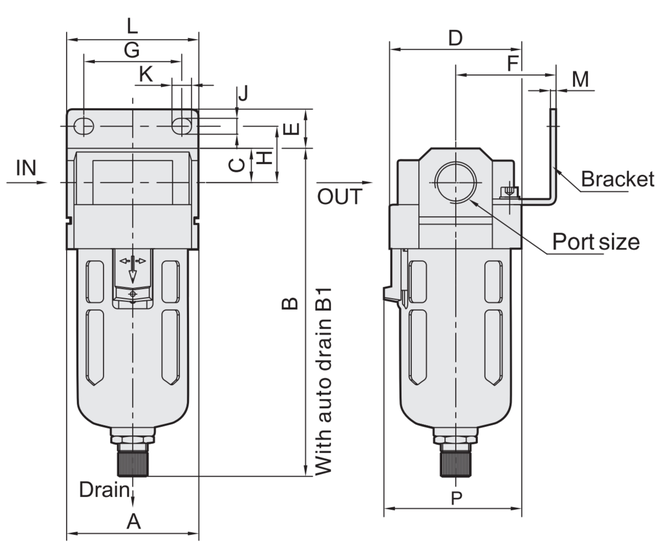

EIF5000

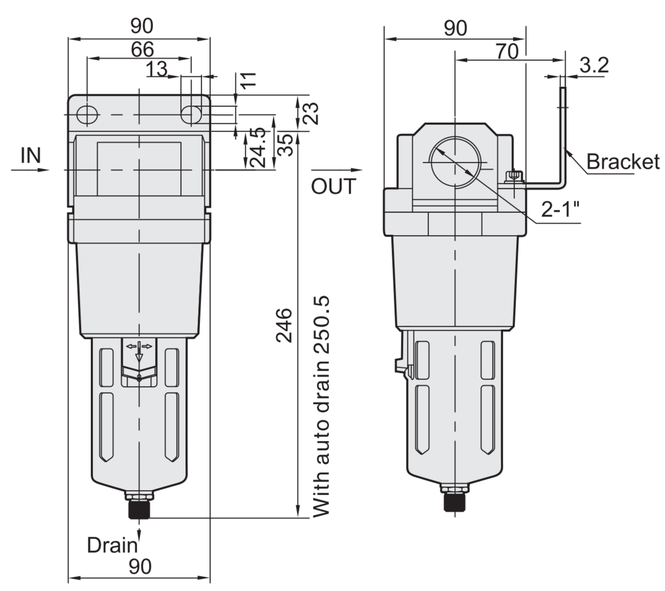

Model	Port Size (G)	A	B	B1	C	D	E	F	G	H	J	K	L	M	P
EIF2000	1/8"–1/4"	40	95	133.5	10.5	40	25	31	19	14	17	6.8	40	2	-
EIF3000	1/4"–3/8"	53	132.5	145	14	53	15	41.5	40	22	6.5	8	53	2	56
EIF4000	3/8"1/2"	70	168	171.5	18	70	18	53	54	27	8.5	10.5	70	2	73
EIF5000	3/4"–1"	90	246	250	24	90	23	67	66	35	11	13	90	3	-