EVSH

Pressure Relief Valve (3/2)

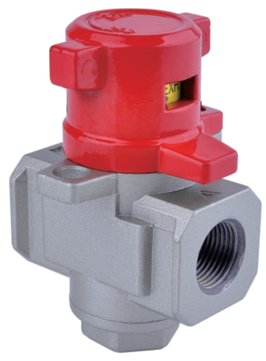

EVSH

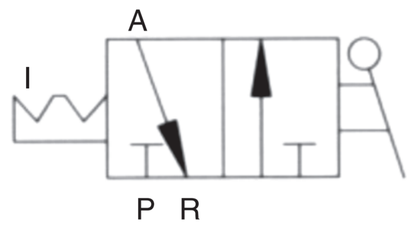

How to Order?

Series No.	Body Size	—	Port Size	—	Thread Type
EVSH Series	2000: 2000 Body 3000: 3000 Body 4000: 4000 Body 5000: 5000 Body		01: 1/8" 02: 1/4" 03: 3/8" 04: 1/2" 06: 3/4" 10: 1"		Blank: G P: PT T: NPT

Order Example:

EVSH series 3/2 way check valve, 2000 body size, 1/4" port size, PT thread, ERP code is: EVSH2000–02–P

Main Dimension

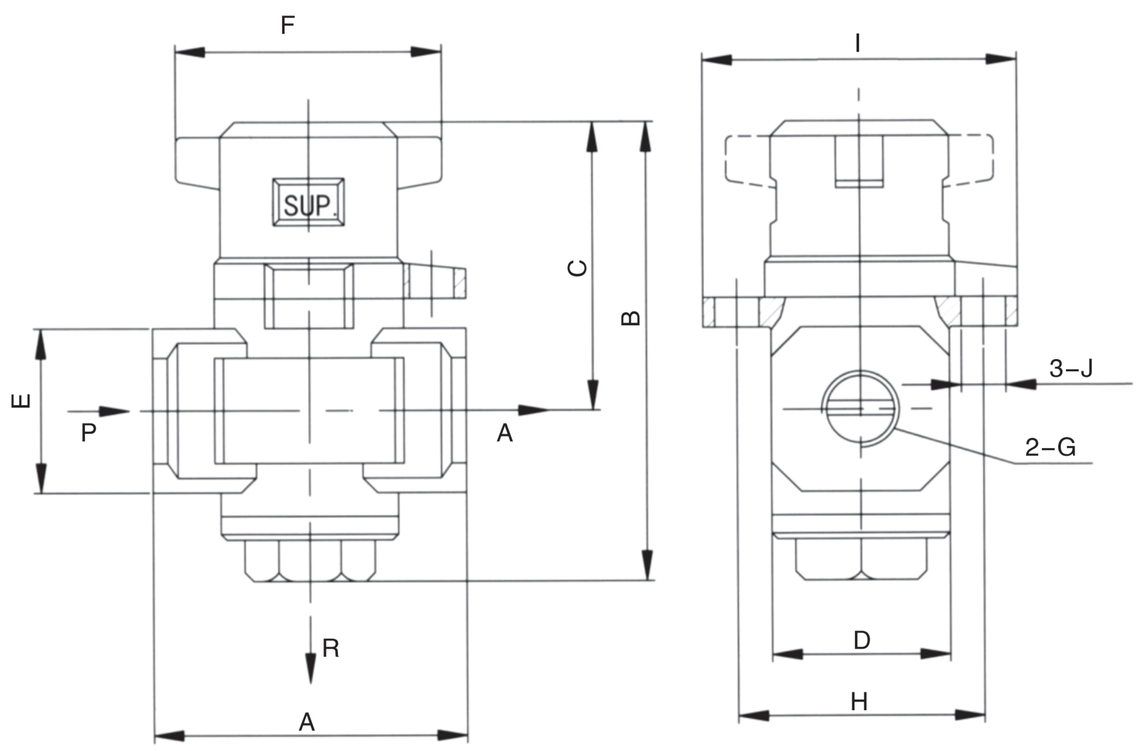

Model	G	Exhaust port	A	B	C	D	E	F	H	I	J
EVSH2000–01	1/8	1/8	40	59	39	28	22	40	32	41	Φ6
EVSH2000–02	1/4	1/8	40	59	39	28	22	40	32	41	Φ6
EVSH3000–02	1/4	1/4	53	78	49	30	28	45	41.5	53	Φ7.5
EVSH3000–03	3/8	1/4	53	78	49	30	28	45	41.5	53	Φ7.5
EVSH4000–03	3/8	3/8	70	84	52	36	36	45	41.5	53	Φ7.5
EVSH4000–04	1/2	3/8	70	84	52	36	36	45	41.5	53	Φ7.5
EVSH5000–10	1	1/2	90	136	72	54	48	68	77	90	Φ8.5