EGP200–F–E

Sponge Gripper(External Vacuum Source)

Product Features

- Suitable for different industry products grabing, meet various specifications.
- Flexible selection of standard or customized gripper, suction of different sizes can be freely combined and used.
- Optional self–closing valve technology can solve workpieces with large vacuum leakage, uneven surface, different sizes and geometric shapes.
- Vacuum source can be connected to an external vacuum generator, suitable for using with electrically driven vacuum devices (blowers or vacuum pumps).
- Modular design for easy maintenance.
- The interface is reserved, functional components can be directly added to the gripper, optimize the process, environmental protection and energy saving.
- The material is aluminum alloy, factory plastic and carbon fiber composite material, which has the characteristics of high strength and light weight.
- Easy to install,with T–type removable mounting slider， available for fixing grippers as well as for mounting or mounting sensors.
- Rubber gasket accessory for quick replacement.

How to Order?

Series No.	Gripper Width	—	Gripper Length	Valve Technology	—	Suction–hole Type	Gasket Thickness Type	—	Vacuum Source
EGP: Vacuum gripper	200:200mm		300:300mm 800:800mm 400:400mm 900:900mm 500:500mm 1000:1000mm 600:600mm 1100:1100mm 700:700mm 1200:1200mm	V:Self–closing valve L:Flow valve S:High–speed valve		P20 P30	10:10 15:15 20:20 30:30 10F10:With filter function 15F15:With filter function M:Traceless type		E:Connection interface for external vacuum generator

Order Example: EGP series vacuum gripper, gripper width 200mm, gripper length 100mm, self–closing valve, suctioin–hole type P20,gasket thickness 20mm, connection interface for external vacuum generator.EPR code is:EGP200–1000V–P2020–E

Product Structure

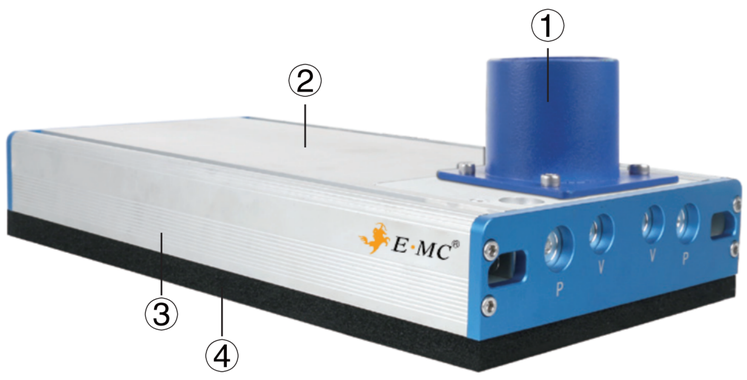

① Connection port for external vacuum generator.
② Gripper body: The material is made of reinforced aluminum alloy.
③ Built–in valve technology is optional: Self–closing valve Flow valve High–speed valve.
④ Suction–hole Type is optional: universal type,customised type.

Suction–hole Type

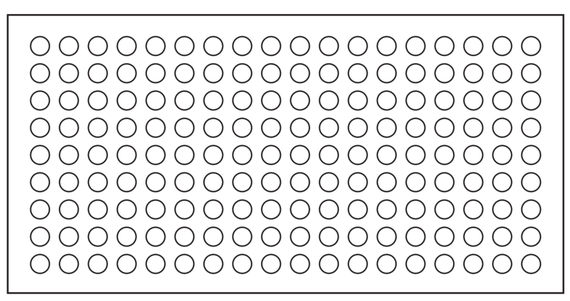

EGP200 standardised suction–hole type
Type：P20
Universal type

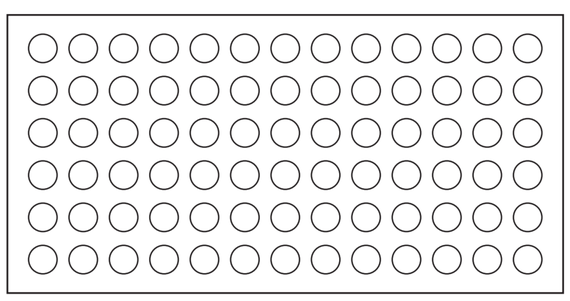

EGP200 standardised suction–hole type
Type：P30
Universal type

Performance Parameter

Model	Suction–hole Type	Supply Gas Pressure (MPa)	Hole Number	Gas Consumption (L/min)	Vacuum Degree (kPa)	Vacuum Flow (L/min)	Suction Force N(–65kPa)	Weight (kg)
EGP200-300V-P20□-E	P20	0.4~0.6	126	300	–40	1050	712	3.2
EGP200-400V-P20□-E	P20	0.4~0.6	171	300	–40	1050	966	3.8
EGP200-500V-P20□-E	P20	0.4~0.6	216	400	–40	1400	1221	4.4
EGP200-600V-P20□-E	P20	0.4~0.6	261	400	–40	1400	1475	5
EGP200-700V-P20□-E	P20	0.4~0.6	306	400	–40	1400	1730	5.6
EGP200-800V-P20□-E	P20	0.4~0.6	351	500	–40	1750	1984	6.2
EGP200-900V-P20□-E	P20	0.4~0.6	396	500	–40	1750	2238	6.8
EGP200-1000V-P20□-E	P20	0.4~0.6	441	600	–40	2100	2493	7.4
EGP200-1100V-P20□-E	P20	0.4~0.6	486	600	–40	2100	2747	8
EGP200-1200V-P20□-E	P20	0.4~0.6	531	600	–40	2100	3001	8.6
EGP200-260V-P30□-E	P30	0.4~0.6	48	200	–40	700	482	3
EGP200-410V-P30□-E	P30	0.4~0.6	78	200	–40	700	784	3.9
EGP200-560V-P30□-E	P30	0.4~0.6	108	300	–40	1050	1085	4.8
EGP200-710V-P30□-E	P30	0.4~0.6	138	300	–40	1050	1387	5.6
EGP200-860V-P30□-E	P30	0.4~0.6	168	400	–40	1400	1688	6.5
EGP200-1010V-P30□-E	P30	0.4~0.6	198	400	–40	1400	1990	7.4
EGP200-1160V-P30□-E	P30	0.4~0.6	228	400	–40	1400	2291	8.3

Main Dimension

Dimension[mm]

Model	A	B	C	D	L	W	H	H1		
EGP200-300V-P20□-E	60 (32)	168	69	54	300	200	70	10	20	30
EGP200-400V-P20□-E	60(32)	168	69	54	400	200	70	10	20	30
EGP200-500V-P20□-E	60 (32)	168	69	54	500	200	70	10	20	30
EGP200-600V-P20□-E	60 (32)	168	69	54	600	200	70	10	20	30
EGP200-700V-P20□-E	60(32)	168	69	54	700	200	70	10	20	30
EGP200-800V-P20□-E	60 (32)	168	69	54	800	200	70	10	20	30
EGP200-900V-P20□-E	60 (32)	168	69	54	900	200	70	10	20	30
EGP200-1000V-P20□-E	60 (32)	168	69	54	1000	200	70	10	20	30
EGP200-1100V-P20□-E	60 (32)	168	69	54	1100	200	70	10	20	30
EGP200-1200V-P20□-E	60 (32)	168	69	54	1200	200	70	10	20	30

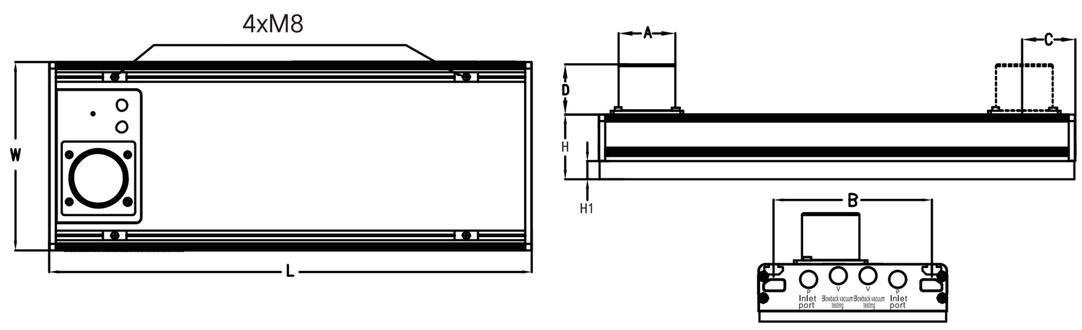

Dimension[mm]
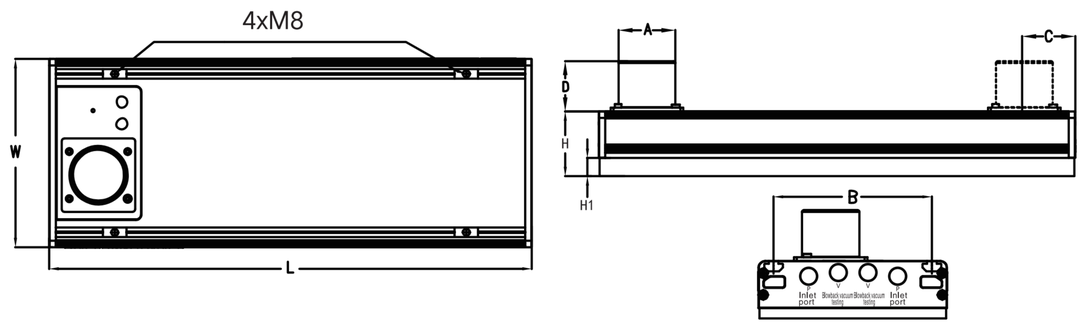
Model	A	B	C	D	L	W	H	H1		
EGP200-260V-P30□-E	60 (32)	168	69	54	260	200	70	10	20	30
EGP200-410V-P30□-E	60(32)	168	69	54	410	200	70	10	20	30
EGP200-560V-P30□-E	60 (32)	168	69	54	560	200	70	10	20	30
EGP200-710V-P30□-E	60 (32)	168	69	54	710	200	70	10	20	30
EGP200-860V-P30□-E	60(32)	168	69	54	860	200	70	10	20	30
EGP200-1010V-P30□-E	60 (32)	168	69	54	1010	200	70	10	20	30
EGP200-1160V-P30□-E	60 (32)	168	69	54	1160	200	70	10	20	30