ENB

Stainless Steel Fluid Control 2-Way Valves

◎ Product Features

- The valve body adopts precision stainless steel casting process to reduce the resistance of the flow path to enhance the flow performance.
- Valve body from 1 to 4 series,wide size range from 1/8" to 1", flow orifice from φ7 to φ25, meet the needs of various working conditions.
- Seals are available in NBR, EPDM, and VITON, and can be used in air, water, oil, gas, vacuum, and liquid.
- It can be controlled by external pilot air or electromagnetic control. When using the external pilot air control, it can be used in occasions without electricity, flammable and explosive, etc.
- Optional type from normal open, normal close, and double air control, compact structure, safe and reliable.

◎ How to order?

Series	Valve Body ID Code	Controls	Initial Status (Max. Pressure)	—	Port Size	Voltage	Connection Mode	Valve Body Material	Seal Material	—	Thread Type	—	Mounting Type
ENB	1: 1 Series 2: 2 Series 3: 3 Series 4: 4 Series	0: Air Control 1: External pilot electromagnetic type (*Only N.C. for External pilot electromagentic type)	1: N.C.(0.5MPa) 3: Double Air Control(1MPa) 4: N.C.(1MPa)			Blank: Air Control Without Voltage E1: AC110V E2: AC220V E4: DC24V E5: DC12V E7: AC24V * Only for External pilot electromagnetic type	Blank: DIN Connector L: Plug–in Type F: Flying leads	S: Stainless steel	Blank: NBR E: EPDM V: VITON		Blank: G P: PT T: NPT		Blank: No B: with Bracket

Valve Body	Code	Thread
1	06	1/8
	08	1/4
	10	3/8
2	10	3/8
	15	1/2
3	20	3/4
4	25	1

The corresponding relationship of Valve body size, port size, orifice size, initial staus(Max. Pressure) is shown in the table below:

Vavle body size	Orifice	Initial Status(Max. Pressure)			Port Size	
		1: N.C.(0.5MPa)	3: Double Air Control(1MPa)	4: N.C.(1MPa)	Code	Thread
1	Ø7	–	√	√	06	1/8
		–	√	√	08	1/4
		–	√	√	10	3/8
2	Ø11	–	–	√	10	3/8
	Ø15	√	√	–		
	Ø11	–	–	√	15	1/2
	Ø15	√	√	–		
3	Ø14	–	–	√	20	3/4
	Ø20	√	√	–		
4	Ø16	–	–	√	25	1
	Ø25	√	√	–		

Order Example: ENB series valve, 2 series valve body, air conttol, N.C.(1MPa), 3/8" port size, stainless steel valve body, EPDM seal, PT thread, with bracket, ERP code is ENB204–10SE–P–B

◎ Use Fluid Comparison Chart

Fluid name		Air (General, dry)	Low vacuum (>–101KPa)	Co_2	N_2	Ar	He	Water (general, <60°C)	Water (<99°C, gas–controlled only)	Turbine oils	Ingots Oils	Fuel Oil 3 (© fuel oil)	Silicone Oils	Naphtha Oils	Glycol (<80°C)	Boiler Water
Seal Material Quality	NBR	◎	◎	○	◎	◎	△	○	△	◎	△	△	○	△	○	○
	VITON	◎	◎	△	◎	◎	◎	◎	◎	◎	◎	◎	◎	◎	◎	○
	EPDM	○	○	◎	◎	△	△	◎	◎	△	△	△	△	△	◎	◎

◎: Superior ○: Favourable △: Unusable

E·MC®

Specifications

Model	ENB1□□-06	ENB1□□-08	ENB1□□-10	ENB2□4-10	ENB203-10	ENB2□1-10	ENB2□4-15	ENB203-15	ENB2□1-15	ENB3□4-20	ENB303-20	ENB3□1-20	ENB4□4-25	ENB403-25	ENB4□1-25
Port size	1/8"	1/4"	3/8"				1/2"			3/4"			1"		
Orifice	7			11	15		11	15		14	20		16	25	
CV value	0.8	1	1.1	2.6	4		2.6	4.8		5.4	7.4		7	12.5	
Working pressure(MPa)	-0.1~1.0					-0.1~0.5	-0.1~1.0		-0.1~0.5	-0.1~1.0		-0.1~0.5	-0.1~1.0		-0.1~0.5
Guaranteed pressure(MPa)	1.5														
Working medium	air, water, oil,etc.														
Working medium temperature(℃)	NBR:-5-70(non-freezing) EPDM、VITON:-5-99(non-freezing)														
External pilot air control Pressure(MPa)	ENB□□1、ENB□□4:0.25~0.7						ENB□□□3:0.1+0.25X(use pressure)~0.25+0.25X(use pressure) See the table below for details.								
External pilot air control Temperature	-5~70(non-freezing)														
Seal material	NBR、EPDM、VITON														
Weight(g)	253			563						823			1292		

*Oil cannot be supplied where the seal material is EPDM.

ENB□ □2, ENB□ □3 (normal open, dual air control type) pilot pressure should correspond to the working pressure in the following range of tables

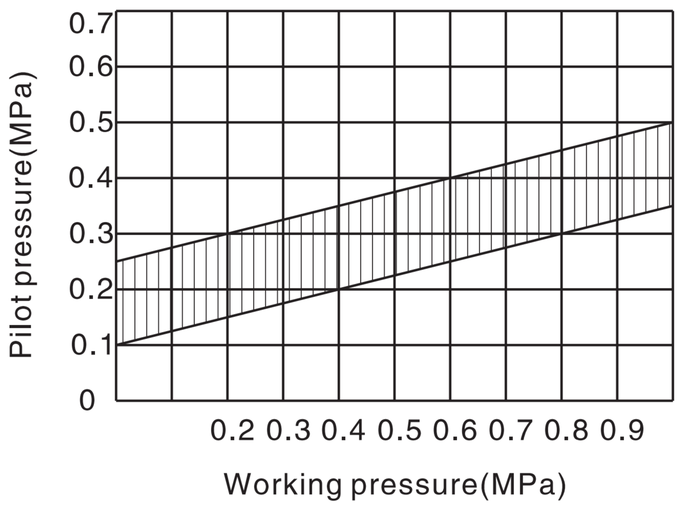

Pneumatic Symbols

Valve type / Acting type	N.C. Normal Close	C.O. Dual air control
Air control	ENB□0$^{1}_{4}$	ENB□03
	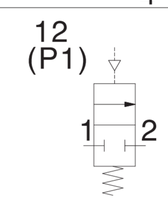	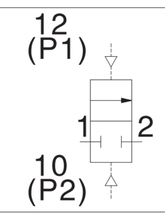
External pilot electromagnetic control	ENB□1$^{1}_{4}$	
	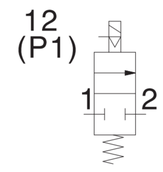	

Main Dimension

ENB1-06/08/10

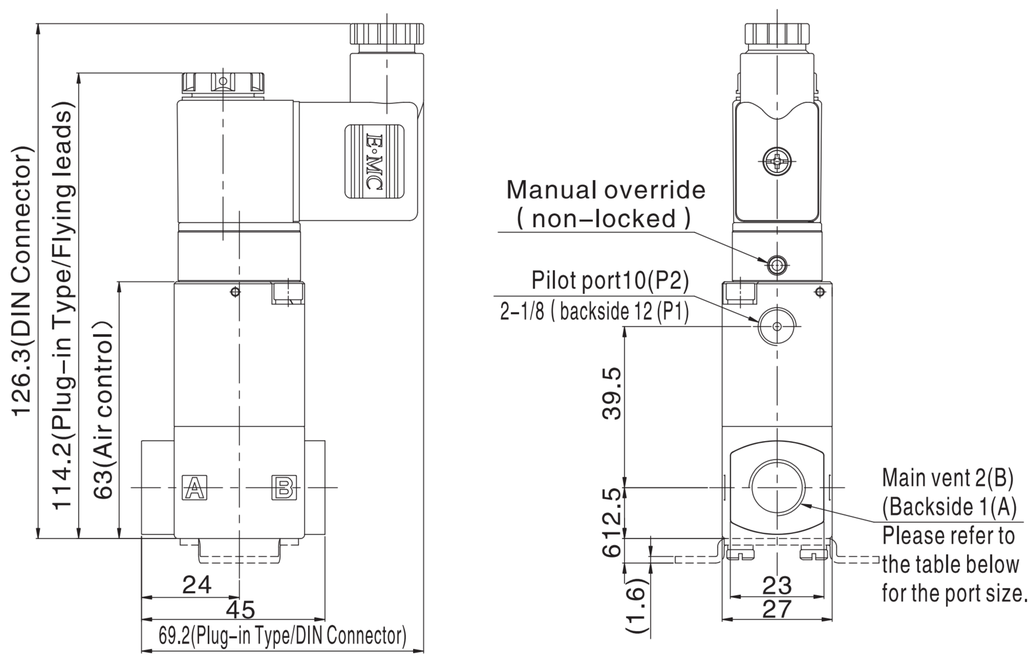

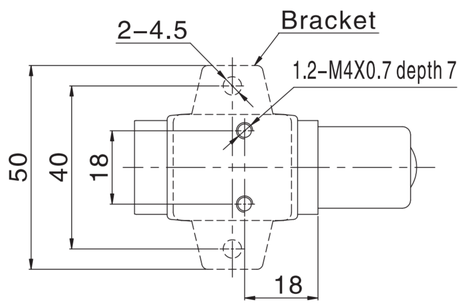

Mode	Main vent 1(A)、2(B)
ENB1□□-06	1/8
ENB1□□-08	1/4
ENB1□□-10	3/8

Note: When the optional bracket, the bracket is packed independently and sent with the goods, and installed by the customer.

ENB2-10/15、ENB3-20、ENB4-25

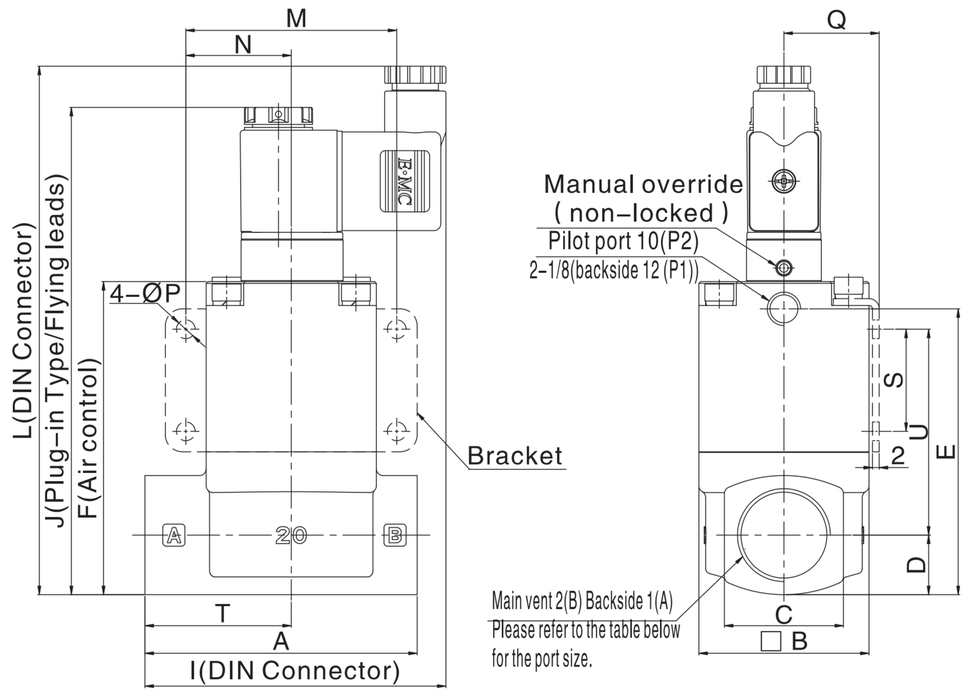

Model	Main vent1(A)、2(B)	A	B	C	D	E	F
ENB2□□-10	3/8	63	42	28	14	72.5	80.5
ENB2□□-15	1/2						
ENB3□□-20	3/4	80	50	35	17.5	84	92
ENB4□□-25	1	90	60	40	20	99.5	107.5

Model	I	J	L	M	N	P	Q	S	T	
ENB2□□-10	79.5	131.7	143.8	52	26	4.5	24	25	34	55
ENB2□□-15										
ENB3□□-20	88.5	143.2	155.3	62	31	5.5	28	30	43	60.5
ENB4□□-25	94.5	158.7	170.8	72	36	6.5	33	35	49	72.5