E·MC®

# SZP2-T/X

## Heavy Duty Rotating with Buffer

### ◎ How to Order?

| Series No. | — | Stent Model | □ | Pad Diameter | Pad Model | Pad Material | JB | 缓冲行程 |
|---|---|---|---|---|---|---|---|---|
| SZP2: SZP Series | | T: Vertical<br>X: Lateral | F: Rotating Model | 32: Ø32 80: Ø80<br>40: Ø40 100: Ø100<br>50: Ø50 125: Ø125<br>63: Ø63 | H: Heavy Duty Model<br>HB: Heavy Duty Bellows Type | N: NBR<br>S: Silicone Rubber | | 25<br>50<br>75<br>100 |

**Order Example:** SZP2 series heavy duty rotating vacuum pad with buffer, direction vertical,rotating model,diameterφ40, heavy duty model,silicone rubber,strok25.
ERP code is SZP2-TF40HN-25.

### ◎ Rotating Bracket with Buffer Size

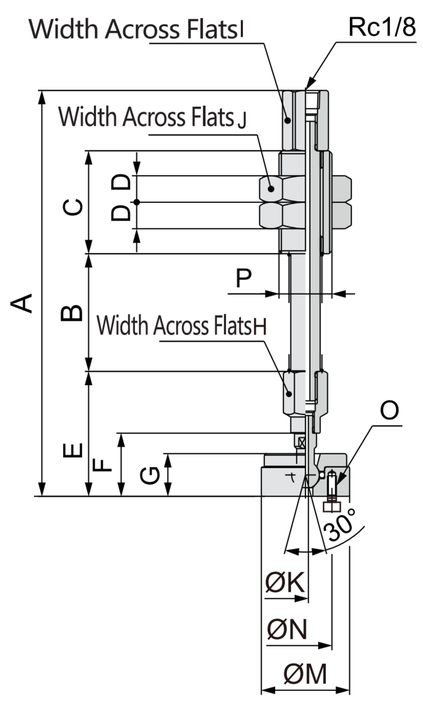


| Model | A | B | C | D | E | F | G | H | I | J | K | M | N | O | P |
|---|---|---|---|---|---|---|---|---|---|---|---|---|---|---|---|
| SZP2B-TF0JB25 | 138 | 40 | 35 | 9 | 42.5 | 21.5 | 14.5 | 13 | 14 | 27 | 2 | 30 | 14 | 3-M2.5X0.45 | M14X1.0 |
| SZP2B-TF0JB50 | 173 | 75 | | | | | | | | | | | | | |
| SZP2B-TF0JB75 | 209 | 111 | | | | | | | | | | | | | |
| SZP2B-TF1JB25 | 138 | 40 | | | | | | | | | | | 18 | 3-M3X0.5 | |
| SZP2B-TF1JB50 | 173 | 75 | | | | | | | | | | | | | |
| SZP2B-TF1JB75 | 209 | 111 | | | | | | | | | | | | | |
| SZP2B-TF2JB25 | 172.5 | 44 | 50 | 9.5 | 54.5 | 28.5 | 19 | 17 | 17 | 30 | 4 | 50 | 34 | 4-M4X0.7 | M16X1.5 |
| SZP2B-TF2JB50 | 208.5 | 80 | | | | | | | | | | | | | |
| SZP2B-TF2JB75 | 248.5 | 120 | | | | | | | | | | | | | |
| SZP2B-TF2JB100 | 283.5 | 155 | | | | | | | | | | | | | |
| SZP2B-TF3JB25 | 173.5 | 44 | | | 55.5 | 29.5 | 20 | 17 | 17 | 30 | 4 | 70 | 40 | 4-M5X0.8 | |
| SZP2B-TF3JB50 | 209.5 | 80 | | | | | | | | | | | | | |
| SZP2B-TF3JB75 | 249.5 | 120 | | | | | | | | | | | | | |
| SZP2B-TF3JB100 | 284.5 | 155 | | | | | | | | | | | | | |

## ◎ Rotating Bracket with Buffer Size

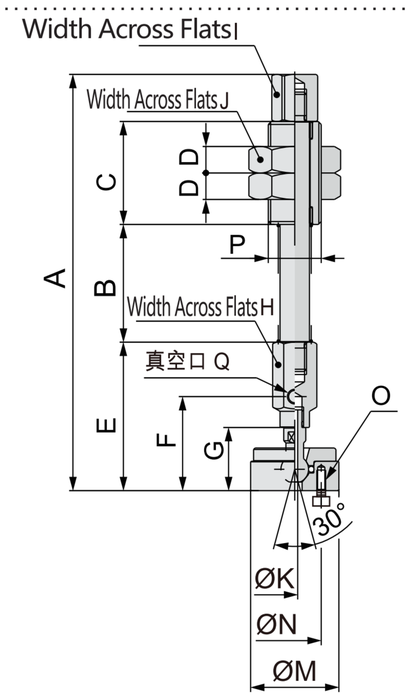


| Model | A | B | C | D | E | F | G | H | I | J | K | M | N | O | P | Q |
|---|---|---|---|---|---|---|---|---|---|---|---|---|---|---|---|---|
| SZP2B-XF0JB25 | 141.5 | 40 | 35 | 9 | 42.5 | 21.5 | 14.5 | 13 | 14 | 27 | 2 | 30 | 14 | 3-M2.5X0.45 | M14X1.0 | M5X0.8 |
| SZP2B-XF0JB50 | 176.5 | 75 | | | | | | | | | | | | | | |
| SZP2B-XF0JB75 | 212.5 | 111 | | | | | | | | | | | | | | |
| SZP2B-XF1JB25 | 141.5 | 40 | | | | | | | | | | | 18 | 3-M3X0.5 | | |
| SZP2B-XF1JB50 | 176.5 | 75 | | | | | | | | | | | | | | |
| SZP2B-XF1JB75 | 212.5 | 111 | | | | | | | | | | | | | | |
| SZP2B-XF2JB25 | 182.5 | 44 | 50 | 9.5 | 54.5 | 28.5 | 19 | 17 | 17 | 30 | 4 | 50 | 34 | 4-M4X0.7 | M16X1.5 | Rc1/8 |
| SZP2B-XF2JB50 | 218.5 | 80 | | | | | | | | | | | | | | |
| SZP2B-XF2JB75 | 258.5 | 120 | | | | | | | | | | | | | | |
| SZP2B-XF2JB100 | 293.5 | 155 | | | | | | | | | | | | | | |
| SZP2B-XF3JB25 | 182.5 | 44 | | | 55.5 | 29.5 | 20 | 17 | 17 | 30 | 4 | 70 | 40 | 4-M5X0.8 | | |
| SZP2B-XF3JB50 | 218.5 | 80 | | | | | | | | | | | | | | |
| SZP2B-XF3JB75 | 258.5 | 120 | | | | | | | | | | | | | | |
| SZP2B-XF3JB100 | 293.5 | 155 | | | | | | | | | | | | | | |

## ◎ Rotating Bracket with Buffer Size

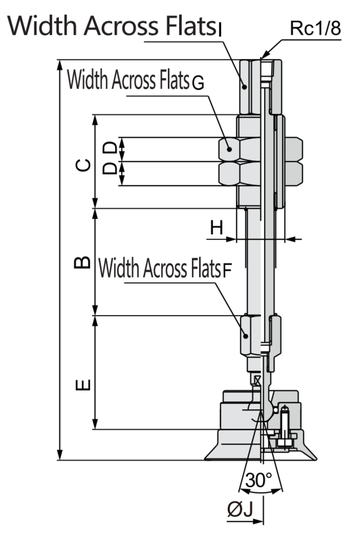


| Model | A | B | C | D | E | F | G | H | I | ØJ | Replace The Support Model. |
|---|---|---|---|---|---|---|---|---|---|---|---|
| SZP2-TF32H□JB25 | 146 | 40 | 35 | 9 | 42.5 | 13 | 27 | M18X1.5 | 14 | 2 | SZP2B-TF0JB25 |
| SZP2-TF32H□JB50 | 181 | 75 | | | | | | | | | SZP2B-TF0JB50 |
| SZP2-TF32H□JB75 | 217 | 111 | | | | | | | | | SZP2B-TF0JB75 |
| SZP2-TF40H□JB25 | 149.5 | 40 | | | | | | | | | SZP2B-TF1JB25 |
| SZP2-TF40H□JB50 | 184.5 | 75 | | | | | | | | | SZP2B-TF1JB50 |
| SZP2-TF40H□JB75 | 220.5 | 111 | | | | | | | | | SZP2B-TF1JB75 |
| SZP2-TF50H□JB25 | 149.5 | 40 | | | | | | | | | SZP2B-TF1JB25 |
| SZP2-TF50H□JB50 | 184.5 | 75 | | | | | | | | | SZP2B-TF1JB50 |
| SZP2-TF50H□JB75 | 220.5 | 111 | | | | | | | | | SZP2B-TF1JB75 |
| SZP2-TF63H□JB25 | 187 | 44 | 50 | 9.5 | 54.5 | 17 | 30 | M22X1.5 | 17 | 4 | SZP2B-TF2JB25 |
| SZP2-TF63H□JB50 | 223 | 80 | | | | | | | | | SZP2B-TF2JB50 |
| SZP2-TF63H□JB75 | 263 | 120 | | | | | | | | | SZP2B-TF2JB75 |
| SZP2-TF63H□JB100 | 298 | 155 | | | | | | | | | SZP2B-TF2JB100 |
| SZP2-TF80H□JB25 | 189 | 44 | | | | | | | | | SZP2B-TF2JB25 |
| SZP2-TF80H□JB50 | 225 | 80 | | | | | | | | | SZP2B-TF2JB50 |
| SZP2-TF80H□JB75 | 265 | 120 | | | | | | | | | SZP2B-TF2JB75 |
| SZP2-TF80H□JB100 | 300 | 155 | | | | | | | | | SZP2B-TF2JB100 |
| SZP2-TF100H□JB25 | 194.5 | 44 | | | 55.5 | | | | | | SZP2B-TF3JB25 |
| SZP2-TF100H□JB50 | 230.5 | 80 | | | | | | | | | SZP2B-TF3JB50 |
| SZP2-TF100H□JB75 | 270.5 | 120 | | | | | | | | | SZP2B-TF3JB75 |
| SZP2-TF100H□JB100 | 305.5 | 155 | | | | | | | | | SZP2B-TF3JB100 |
| SZP2-TF125H□JB25 | 194.5 | 44 | | | | | | | | | SZP2B-TF3JB25 |
| SZP2-TF125H□JB50 | 230.5 | 80 | | | | | | | | | SZP2B-TF3JB50 |
| SZP2-TF125H□JB75 | 270.5 | 120 | | | | | | | | | SZP2B-TF3JB75 |
| SZP2-TF125H□JB100 | 305.5 | 155 | | | | | | | | | SZP2B-TF3JB100 |

E·MC®

## ◎ Rotating Bracket with Buffer Size

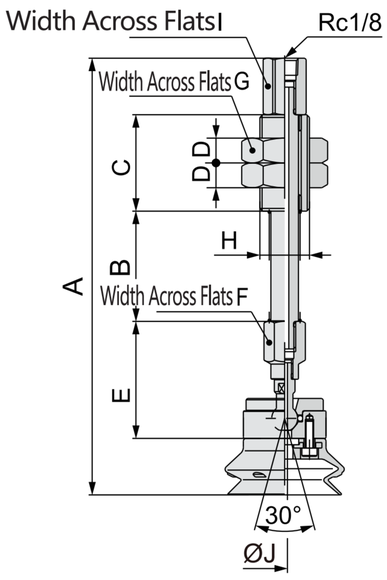


| Model | A | B | C | D | E | F | G | H | I | ØJ | Replace The Support Model. |
|---|---|---|---|---|---|---|---|---|---|---|---|
| SZP2-TF32HB□JB25 | 156.5 | 40 | 35 | 9 | 42.5 | 13 | 27 | M18X1.5 | 14 | 2 | SZP2B-TF0JB25 |
| SZP2-TF32HB□JB50 | 191.5 | 75 | | | | | | | | | SZP2B-TF0JB50 |
| SZP2-TF32HB□JB75 | 227.5 | 111 | | | | | | | | | SZP2B-TF0JB75 |
| SZP2-TF40HB□JB25 | 58.5 | 40 | | | | | | | | | SZP2B-TF1JB25 |
| SZP2-TF40HB□JB50 | 193.5 | 75 | | | | | | | | | SZP2B-TF1JB50 |
| SZP2-TF40HB□JB75 | 229.5 | 111 | | | | | | | | | SZP2B-TF1JB75 |
| SZP2-TF50HB□JB25 | 158.5 | 40 | | | | | | | | | SZP2B-TF1JB25 |
| SZP2-TF50HB□JB50 | 193.5 | 75 | | | | | | | | | SZP2B-TF1JB50 |
| SZP2-TF50HB□JB75 | 229.5 | 111 | | | | | | | | | SZP2B-TF1JB75 |
| SZP2-TF63HB□JB25 | 204 | 44 | 50 | 9.5 | 54.5 | 17 | 30 | M22X1.5 | 17 | 4 | SZP2B-TF2JB25 |
| SZP2-TF63HB□JB50 | 240 | 80 | | | | | | | | | SZP2B-TF2JB50 |
| SZP2-TF63HB□JB75 | 280 | 120 | | | | | | | | | SZP2B-TF2JB75 |
| SZP2-TF63HB□JB100 | 315 | 155 | | | | | | | | | SZP2B-TF2JB100 |
| SZP2-TF80HB□JB25 | 209.5 | 44 | | | | | | | | | SZP2B-TF2JB25 |
| SZP2-TF80HB□JB50 | 245.5 | 80 | | | | | | | | | SZP2B-TF2JB50 |
| SZP2-TF80HB□JB75 | 285.5 | 120 | | | | | | | | | SZP2B-TF2JB75 |
| SZP2-TF80HB□JB100 | 320.5 | 155 | | | | | | | | | SZP2B-TF2JB100 |
| SZP2-TF100HB□JB25 | 221 | 44 | | | 55.5 | | | | | | SZP2B-TF3JB25 |
| SZP2-TF100HB□JB50 | 257 | 80 | | | | | | | | | SZP2B-TF3JB50 |
| SZP2-TF100HB□JB75 | 297 | 120 | | | | | | | | | SZP2B-TF3JB75 |
| SZP2-TF100HB□JB100 | 332 | 155 | | | | | | | | | SZP2B-TF3JB100 |
| SZP2-TF125HB□JB25 | 229.5 | 44 | | | | | | | | | SZP2B-TF3JB25 |
| SZP2-TF125HB□JB50 | 265.5 | 80 | | | | | | | | | SZP2B-TF3JB50 |
| SZP2-TF125HB□JB75 | 305.5 | 120 | | | | | | | | | SZP2B-TF3JB75 |
| SZP2-TF125HB□JB100 | 340.5 | 155 | | | | | | | | | SZP2B-TF3JB100 |

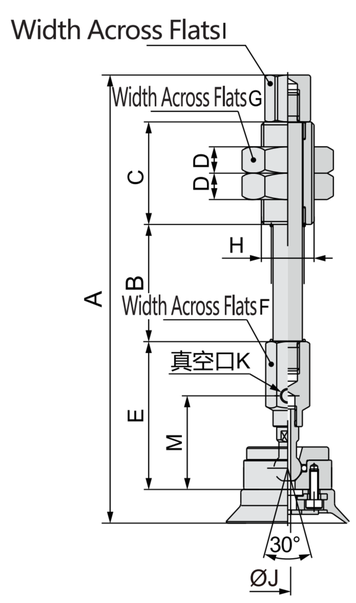


| Model | A | B | C | D | E | F | G | H | I | ØJ | K | E | Replace The Support Model. |
|---|---|---|---|---|---|---|---|---|---|---|---|---|---|
| SZP2-XF32H□JB25 | 149.5 | 40 | 35 | 9 | 42.5 | 13 | 27 | M18X1.5 | 14 | 2 | M5X0.8 | 32 | SZP2B-XF0JB25 |
| SZP2-XF32H□JB50 | 184.5 | 75 | | | | | | | | | | | SZP2B-XF0JB50 |
| SZP2-XF32H□JB75 | 220.5 | 111 | | | | | | | | | | | SZP2B-XF0JB75 |
| SZP2-XF40H□JB25 | 153 | 40 | | | | | | | | | | | SZP2B-XF1JB25 |
| SZP2-XF40H□JB50 | 188 | 75 | | | | | | | | | | | SZP2B-XF1JB50 |
| SZP2-XF40H□JB75 | 224 | 111 | | | | | | | | | | | SZP2B-XF1JB75 |
| SZP2-XF50H□JB25 | 153 | 40 | | | | | | | | | | | SZP2B-XF1JB25 |
| SZP2-XF50H□JB50 | 188 | 75 | | | | | | | | | | | SZP2B-XF1JB50 |
| SZP2-XF50H□JB75 | 224 | 111 | | | | | | | | | | | SZP2B-XF1JB75 |
| SZP2-XF63H□JB25 | 197 | 44 | 50 | 9.5 | 54.5 | 17 | 30 | M22X1.5 | 17 | 4 | Rc1/8 | 45 | SZP2B-XF2JB25 |
| SZP2-XF63H□JB50 | 233 | 80 | | | | | | | | | | | SZP2B-XF2JB50 |
| SZP2-XF63H□JB75 | 273 | 120 | | | | | | | | | | | SZP2B-XF2JB75 |
| SZP2-XF63H□JB100 | 308 | 155 | | | | | | | | | | | SZP2B-XF2JB100 |
| SZP2-XF80H□JB25 | 199 | 44 | | | | | | | | | | | SZP2B-XF2JB25 |
| SZP2-XF80H□JB50 | 235 | 80 | | | | | | | | | | | SZP2B-XF2JB50 |
| SZP2-XF80H□JB75 | 275 | 120 | | | | | | | | | | | SZP2B-XF2JB75 |
| SZP2-XF80H□JB100 | 310 | 155 | | | | | | | | | | | SZP2B-XF2JB100 |
| SZP2-XF100H□JB25 | 204.5 | 44 | | | 55.5 | | | | | | | 46 | SZP2B-XF3JB25 |
| SZP2-XF100H□JB50 | 240.5 | 80 | | | | | | | | | | | SZP2B-XF3JB50 |
| SZP2-XF100H□JB75 | 280.5 | 120 | | | | | | | | | | | SZP2B-XF3JB75 |
| SZP2-XF100H□JB100 | 315.5 | 155 | | | | | | | | | | | SZP2B-XF3JB100 |
| SZP2-XF125H□JB25 | 204.5 | 44 | | | | | | | | | | | SZP2B-XF3JB25 |
| SZP2-XF125H□JB50 | 240.5 | 80 | | | | | | | | | | | SZP2B-XF3JB50 |
| SZP2-XF125H□JB75 | 280.5 | 120 | | | | | | | | | | | SZP2B-XF3JB75 |
| SZP2-XF125H□JB100 | 315.5 | 155 | | | | | | | | | | | SZP2B-XF3JB100 |

## ◎ Rotating Bracket with Buffer Size

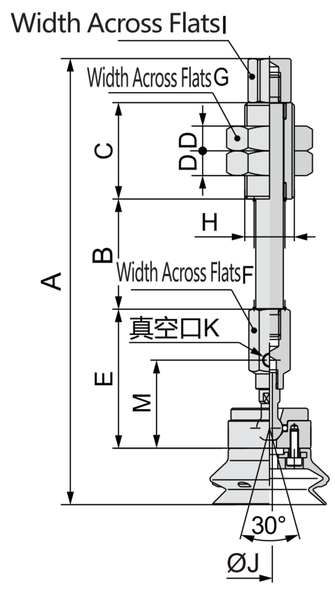


| Model | A | B | C | D | E | F | G | H | I | ØJ | K | E | Replace The Support Model. |
|---|---|---|---|---|---|---|---|---|---|---|---|---|---|
| SZP2-XF32HB□JB25 | 160 | 40 | | | | | | | | | | | SZP2B-XF0JB25 |
| SZP2-XF32HB□JB50 | 195 | 75 | | | | | | | | | | | SZP2B-XF0JB50 |
| SZP2-XF32HB□JB75 | 231 | 111 | | | | | | | | | | | SZP2B-XF0JB75 |
| SZP2-XF40HB□JB25 | 162 | 40 | | | | | | | | | | | SZP2B-XF1JB25 |
| SZP2-XF40HB□JB50 | 197 | 75 | 35 | 9 | 42.5 | 13 | 27 | M18X1.5 | 14 | 2 | M5X0.8 | 32 | SZP2B-XF1JB50 |
| SZP2-XF40HB□JB75 | 233 | 111 | | | | | | | | | | | SZP2B-XF1JB75 |
| SZP2-XF50HB□JB25 | 165.5 | 40 | | | | | | | | | | | SZP2B-XF1JB25 |
| SZP2-XF50HB□JB50 | 200.5 | 75 | | | | | | | | | | | SZP2B-XF1JB50 |
| SZP2-XF50HB□JB75 | 236.5 | 111 | | | | | | | | | | | SZP2B-XF1JB75 |
| SZP2-XF63HB□JB25 | 214 | 44 | | | | | | | | | | | SZP2B-XF2JB25 |
| SZP2-XF63HB□JB50 | 250 | 80 | | | | | | | | | | | SZP2B-XF2JB50 |
| SZP2-XF63HB□JB75 | 290 | 120 | | | | | | | | | | | SZP2B-XF2JB75 |
| SZP2-XF63HB□JB100 | 325 | 155 | | | | | | | | | | | SZP2B-XF2JB100 |
| SZP2-XF80HB□JB25 | 219.5 | 44 | | | 54.5 | | | | | | | 45 | SZP2B-XF2JB25 |
| SZP2-XF80HB□JB50 | 255.5 | 80 | | | | | | | | | | | SZP2B-XF2JB50 |
| SZP2-XF80HB□JB75 | 295.5 | 120 | | | | | | | | | | | SZP2B-XF2JB75 |
| SZP2-XF80HB□JB100 | 330.5 | 155 | | | | | | | | | | | SZP2B-XF2JB100 |
| SZP2-XF100HB□JB25 | 231 | 44 | 50 | 9.5 | | 17 | 30 | M22X1.5 | 17 | 4 | Rc1/8 | | SZP2B-XF3JB25 |
| SZP2-XF100HB□JB50 | 267 | 80 | | | | | | | | | | | SZP2B-XF3JB50 |
| SZP2-XF100HB□JB75 | 307 | 120 | | | | | | | | | | | SZP2B-XF3JB75 |
| SZP2-XF100HB□JB100 | 342 | 155 | | | 55.5 | | | | | | | 46 | SZP2B-XF3JB100 |
| SZP2-XF125HB□JB25 | 239.5 | 44 | | | | | | | | | | | SZP2B-XF3JB25 |
| SZP2-XF125HB□JB50 | 275.5 | 80 | | | | | | | | | | | SZP2B-XF3JB50 |
| SZP2-XF125HB□JB75 | 315.5 | 120 | | | | | | | | | | | SZP2B-XF3JB75 |
| SZP2-XF125HB□JB100 | 350.5 | 155 | | | | | | | | | | | SZP2B-XF3JB100 |