◎ Tips for using fittings

Please Read follow information before using the product

⚠ Warning

1. Do not use the fittings to fluid except water, air, confirm before using to other fluid.
2. Do not use other fittings in condition that sputter is existing, anti–sputter fitting are only permitted, or it may cause the danger of fire.
3. Do not use fittings except rotary fitting, high speed rotary fitting or multi–way rotary fitting in condition that require rotary at the thread side or hose side, it will cause damage to rotate or press the un–rotary fittings.
4. Do not use fitting except EG fittings in condition that requires no static electric. Or it will cause the damage to system for existing of static electric.
5. Avoid external impact such as bending, twisting or drawing on fittings, as these external impact will cause damage to the fittings.

⚠ Caution

Be sure the tolerance of fittings to meet the following conditions for the tube,otherwise it may cause leakage of air or inferiority of the application

◎ Table 1 to check tolerance

Metric Size	Nylon Tube	Polyurethane Tube
ϕ3mm	–	±0.08
ϕ4mm	±0.1	±0.1
ϕ6mm	±0.1	±0.1
ϕ8mm	±0.1	±0.1
ϕ10mm	±0.1	±0.1
ϕ12mm	±0.15	±0.1
ϕ14mm	±0.15	±0.1
ϕ16mm	±0.15	±0.1

Inch Size	Nylon Tube	Polyurethane Tube
ϕ1/8	±0.08	±0.08
ϕ5/32	±0.1	±0.1
ϕ3/16	±0.1	±0.1
ϕ1/4	±0.1	±0.1
ϕ5/16	±0.1	±0.1
ϕ3/8	±0.15	±0.1
ϕ1/2	±0.15	±0.1
ϕ5/8	±0.15	±0.1

◎ Cautions for installing tube

1. Be sure that the section of tube is cut at a right angle .make sure there is no indication of damage to the outside of tube .
2. Try to pull the tube out to check if it has inserted tightly.

◎ Cautions for disconnecting tube

1. Be sure the pressure inside tube is at 0 before disconnectting tube.
2. Pull the tube out after press the sleeve at both end.It may cause scratch, damage on tube or could not pull it out if the sleeve is not pressed rightly. The scratch may left inside fitting and cause air leakage.

◎ Caution for installing equipment body

1. Choose the correct tool and size to install the fitting onto equipment by its hexagon head or hexagon socket design.
2. When fastening the thread, please refer to table 2 for the specific torque range, if torque is high than recommended, this may cause damage or air leakage, iftorque is lower than the recommended, this may cause leakage.
3. After fastening the quick connect fitting, the direction of it should not be changed, if adjusting, please refer to the range of torque.

E·MC®

◎ Table 2 suggested torque, coating or gaskets

Thread Type	Thread Size	Torque	Coating Sealant Color	Gasket Materia
Metric Thread	M3x0.5	0. 7N・m(7kgf・cm)	–	NBR
	M5x0.8	1–1.5N・m (10~15kgf・cm		
	M6x1.0	1.8~2.3N・m(18~23kgf・cm)		
BSPT thread	R1/8	7~9N・m(70~90kgf・cm)	White	–
	R1/4	12~14N・m(120~140kgf・cm)		
	R3/8	22~24N・m (220~240kgf・cm)		
	R1/2	28–30N・m (280~300kgf・cm)		
Unified inch screw thread	No.10–32 UNF	1.5~1.9N・m (15~19kgf・cm)	–	NBR
NPT Thread	1/6–28NPT	7~9N・m (70~90kgf・cm)	White	–
	1/8–27NPT	7~9N・m(70~90kgf・cm)		
	1/4–18NPT	12~14N・m(120~140kgf・cm)		
	3/8–18NPT	22–24N・m (220–240kgf・cm)		
	1/2–14NPI	28–30N・m (280~300kgf・cm)		

◎ Features

1. Metal push in fittings are specially wide used in pneumatic hose related system, with wide varieties to meet all kind of requirements.
2. Rotary body to make pipe connection available at 360° even after installed.
3. Nickle–plated body make the fitting resist to more corrosive and polluted condition.
4. All taped thread fittings are coated with sealant.
5. All parallel thread fittings are fitted with O–ring.

◎ Structure chart

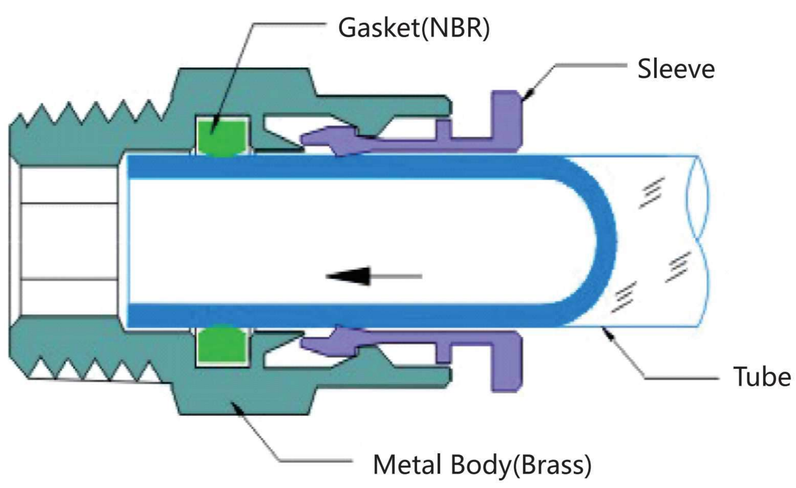

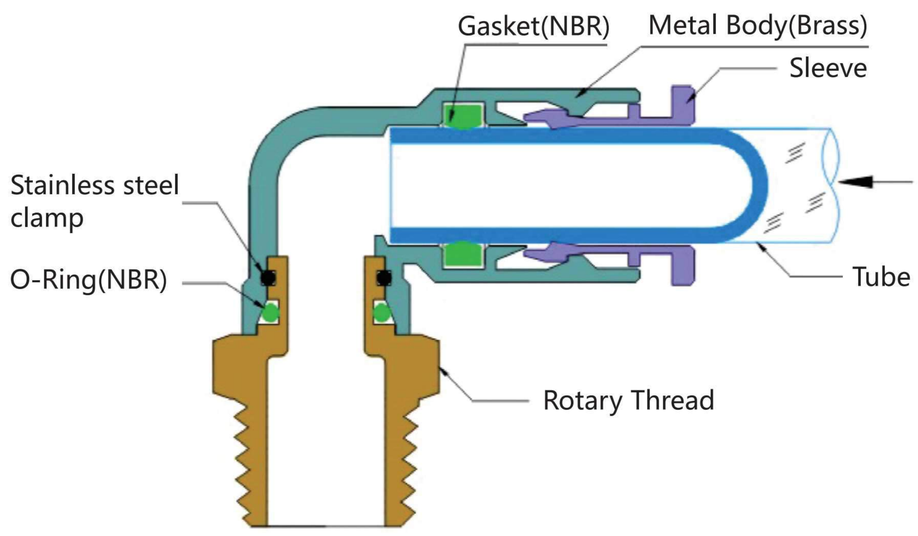

◎ Specifications

Fluid	Air/water (conditional)
U/Operating Pressure	0.095-2.5MPa
Negative Pressure	1.6MPa
Max Pressure	-100KPa (10 Torr)
E/Applicable Tube	-30-120°C

⚠ Warning

1. Working temperature: –30~20℃
2. Working pressure: 0.095–2.5MPa
3. No water hammer(or flow slam)allowed
4. Must connect with hose
5. Water is allowed in some conditions

How to Order?

Series No.	O.D. of Tube	—	Port Size	Thread Type	—	Type Number
EMC EML EMB …	04: 4mm 06: 6mm 08: 8mm 10: 10mm 12: 12mm		M8: M8 01: 1/8" 02: 1/4" 03: 3/8" 04: 1/2"	P: PT G: G T: NPT		A

Order example:

E.MC Series Nickel Plated Brass Fittings, for 4mm O.D. Tube, PT1/8" port size, ERP code is: EMC04–01P–A.

Metric Tubing–PT Thread

EMC

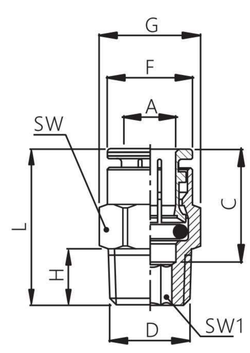

Model	A	D	C	F	L	G	H	SW	SW1	Weight (g)
EMC04-01P-A	4	R1/8	13.5	8	17	11.3	8	10	2.5	5.6
EMC04-02P-A	4	R1/4	13.5	8	18	15.8	9	14	/	13.8
EMC06-01P-A	6	R1/8	17	11.8	23.4	13.5	8	12	4	10.1
EMC06-02P-A	6	R1/4	17	11.8	21.2	15.8	9	14	4	13.7
EMC06-03P-A	6	R3/8	17	11.8	19.2	19.1	9.5	17	4	23.4
EMC06-04P-A	6	R1/2	17	11.8	21	23.7	11.5	21	/	39.6
EMC08-01P-A	8	R1/8	17.5	13.6	27.5	15.8	8	14	5	16
EMC08-02P-A	8	R1/4	17.5	13.6	24.4	15.8	9	14	6	16
EMC08-03P-A	8	R3/8	17.5	13.6	21	19.1	9.5	17	6	21.7
EMC08-04P-A	8	R1/2	17.5	13.6	21	23.7	11.5	21	6	38.6
EMC10-01P-A	10	R1/8	19.7	15.7	29.4	19.1	8	17	5	22
EMC10-02P-A	10	R1/4	19.7	15.7	30.4	19.1	9	17	6	26.5
EMC10-03P-A	10	R3/8	19.7	15.7	26.1	19.1	9.5	17	8	26.8
EMC10-04P-A	10	R1/2	19.7	15.7	23.8	23.7	11.5	21	8	39.5
EMC12-01P-A	12	R1/8	18.7	17.8	29.2	21.4	8	19	5	26.2
EMC12-02P-A	12	R1/4	18.7	17.8	30.2	21.4	9	19	6	26.5
EMC12-03P-A	12	R3/8	18.7	17.8	28.2	21.4	9.5	19	8	29.5
EMC12-04P-A	12	R1/2	18.7	17.8	25.7	23.7	11.5	21	8	37.1
EMC14-03P-A	14	R3/8	20.5	20.8	31.8	23.7	9.5	21	—	39.8
EMC14-04P-A	14	R1/2	20.5	20.8	29.8	23.7	11.5	21	—	44.4
EMC16-03P-A	16	R3/8	21.5	22.8	33.8	26.9	9.5	24	—	44.9
EMC16-04P-A	16	R1/2	21.5	22.8	32.8	26.9	11.5	24	—	51.8
EMC16-06P-A	16	R3/4	21.5	22.8	31.8	30.4	12	27	—	—

EML

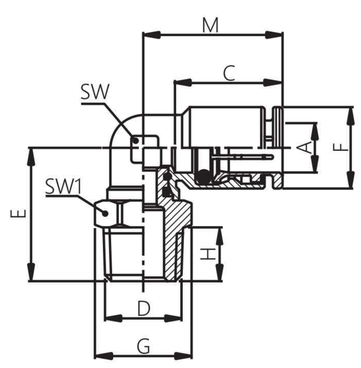

Model	A	D	C	F	M	E	H	G	SW	SW1	Weight (g)
EML04-01P-A	4	R1/8	13.5	8	16.6	17.6	8	11.3	6	10	5.6
EML04-02P-A	4	R1/4	13.5	8	16.6	18.6	9	15.8	6	14	13.8
EML06-01P-A	6	R1/8	17	11.8	22	21	8	13.5	—	12	10.1
EML06-02P-A	6	R1/4	17	11.8	22	22	9	15.8	—	14	13.7
EML06-03P-A	6	R3/8	17	11.8	22	22.5	9.5	19.1	—	17	23.4
EML06-04P-A	6	R1/2	17	11.8	22	24.5	11.5	23.7	—	21	39.6
EML08-01P-A	8	R1/8	17.5	13.6	22.8	21.3	8	13.5	11.5	12	16
EML08-02P-A	8	R1/4	17.5	13.6	22.8	22.3	9	15.8	11.5	14	16
EML08-03P-A	8	R3/8	17.5	13.6	22.8	22.8	9.5	19.1	11.5	17	21.7
EML08-04P-A	8	R1/2	17.5	13.6	22.8	24.8	11.5	23.7	11.5	21	38.6
EML10-01P-A	10	R1/8	19.7	15.7	26.5	26.4	8	15.8	12	14	22
EML10-02P-A	10	R1/4	19.7	15.7	26.5	27.4	9	15.8	12	14	26.5
EML10-03P-A	10	R3/8	19.7	15.7	26.5	27.9	9.5	19.1	12	17	26.8
EML10-04P-A	10	R1/2	19.7	15.7	26.5	29.9	11.5	23.7	12	21	39.5
EML12-01P-A	12	R1/8	18.7	17.8	27.8	27.9	8	19.1	14	14	26.2
EML12-02P-A	12	R1/4	18.7	17.8	27.8	28.9	9	19.1	14	14	26.5
EML12-03P-A	12	R3/8	18.7	17.8	27.8	29.4	9.5	19.1	14	17	29.5
EML12-04P-A	12	R1/2	18.7	17.8	27.8	31.4	11.5	23.7	14	21	37.1
EML14-03P-A	14	R3/8	20.5	20.8	30	34.4	9.5	23.7	19	17	39.8
EML14-04P-A	14	R1/2	20.5	20.8	30	36.4	11.5	23.7	19	17	44.4
EML16-03P-A	16	R3/8	21.5	22.8	32.3	34.4	9.5	23.7	19	21	44.9
EML16-04P-A	16	R1Z2	21.5	22.8	32.3	36.4	11.5	23.7	19	21	51.8
EML16-06P-A	16	R3/4	21.5	22.8	32.3	37.4	12	29.2	19	26	—

E·MC®

Metric Tubing–PT Thread

EMOC

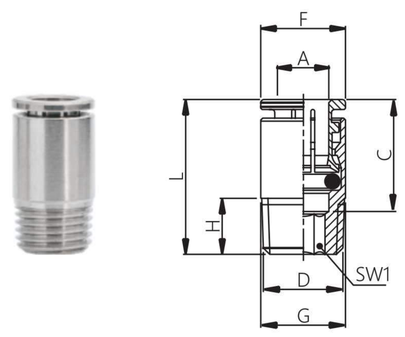

Model	A	D	F	L	C	H	G	SW1	Weight (g)
EMOC04-01P-A	4	R1/8	8	17	13.5	8	10	2.5	6.6
EMOC06-01P-A	6	R1/8	11.8	22.4	17	8	11.8	4	8.2
EMOC06-02P-A	6	R1/4	11.8	21.2	17	9	14	4	14.9
EMOC08-01P-A	8	R1/8	13.6	26.5	17.5	8	13.8	5	13.9
EMOC08-02P-A	8	R1/4	13.6	24.4	17.5	9	13.8	6	14
EMOC08-03P-A	8	R3/8	13.6	21	17.5	9.5	16.8	6	19.7
EMOC10-02P-A	10	R1/4	15.7	29	19.7	9	16	6	25.2
EMOC10-03P-A	10	R3/8	15.7	26.1	19.7	9.5	16.8	8	23.4
EMOC12-02P-A	12	R1/4	17.8	29.2	18.7	9	18.5	6	22.6
EMOC12-03P-A	12	R3/8	17.8	27.2	18.7	9.5	18.5	8	26.1
EMOC12-04P-A	12	R1/2	17.8	25.7	18.7	11.5	21	8	35.9

EMB

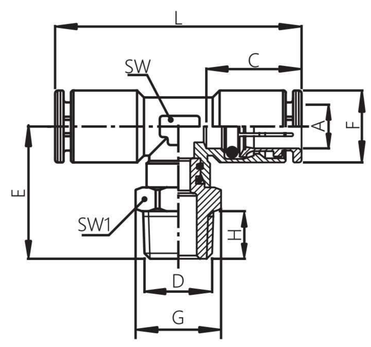

Model	A	D	c	F	L	E	H	G	SW	SW1	Weight (g)
EMB04-01P-A	4	R1/8	13.5	8	32.4	17.6	8	11.3	6	10	11.9
EMB04-02P-A	4	R1/4	13.5	8	32.4	18.6	9	15.8	6	14	17.9
EMB06-01P-A	6	R1/8	17	11.8	43.2	26	8	13.5	10	12	33.1
EMB06-02P-A	6	R1/4	17	11.8	43.2	27	9	15.8	10	14	34
EMB06-03P-A	6	R3/8	17	11.8	43.2	27.5	9.5	19.1	10	17	36.2
EMB06-04P-A	6	R1/2	17	11.8	43.2	29.5	11.5	23.7	10	21	45.4
EMB08-01P-A	8	R1/8	17.5	13.6	44.6	24	8	13.5	12	12	41.3
EMB08-02P-A	8	R1/4	17.5	13.6	44.6	25	9	15.8	12	14	39.5
EMB08-03P-A	8	R3/8	17.5	13.6	44.6	25.5	9.5	19.1	12	17	47
EMB08-04P-A	8	R1/2	17.5	13.6	44.6	27.5	11.5	23.7	12	21	54.6
EMB10-01P-A	10	R1/8	19.7	15.7	54.4	25.8	8	15.8	12.5	14	43.2
EMB10-02P-A	10	R1/4	19.7	15.7	54.4	26.8	9	15.8	12.5	14	47.2
EMB10-03P-A	10	R3/8	19.7	15.7	54.4	27.3	9.5	19.1	12.5	17	50
EMB10-04P-A	10	R1/2	19.7	15.7	54.4	29.3	11.5	23.7	12.5	21	56.7
EMB12-01P-A	12	R1/8	18.7	17.8	55	27.9	8	19.1	14	14	63.1
EMB12-02P-A	12	R1/4	18.7	17.8	55	28.9	9	19.1	14	14	62.8
EMB12-03P-A	12	R3/8	18.7	17.8	55	29.4	9.5	19.1	14	17	70.1
EMB12-04P-A	12	R1/2	18.7	17.8	55	31.4	11.5	23.7	14	21	72.4

EMP

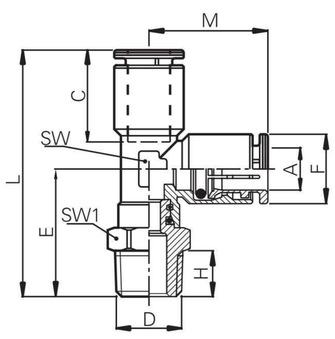

Model	A	D	C	F	H	E	L	M	SW	SW1	Weight (g)
EMP04-01P-A	4	R1/8	13.5	8	8	17.6	33.8	16.2	6	10	13.3
EMP04-02P-A	4	R1/4	13.5	8	9	18.6	34.8	16.2	6	14	18.8
EMP06-01P-A	6	R1/8	17	11.8	8	26	47.6	21.6	10	12	31.5
EMP06-02P-A	6	R1/4	17	11.8	9	27	48.6	21.6	10	14	34.4
EMP06-03P-A	6	R3/8	17	11.8	9.5	27.5	49.1	21.6	10	17	—
EMP06-04P-A	6	R1/2	17	11.8	11.5	29.5	51.1	21.6	10	21	—
EMP08-01P-A	8	R1/8	17.5	13.6	8	24	46.3	22.3	12	12	37
EMP08-02P-A	8	R1/4	17.5	13.6	9	25	47.3	22.3	12	14	38.3
EMP08-03P-A	8	R3/8	17.5	13.6	9.5	25.5	47.8	22.3	12	17	44.1
EMP08-04P-A	8	R1/2	17.5	13.6	11.5	27.5	49.8	22.3	12	21	58.7
EMP10-01P-A	10	R1/8	19.7	15.7	8	25.8	53	27.2	12.5	14	44.9
EMP10-02P-A	10	R1/4	19.7	15.7	9	26.8	54	27.2	12.5	14	47.2
EMP10-03P-A	10	R3/8	19.7	15.7	9.5	27.3	54.5	27.2	12.5	17	52.7
EMP10-04P-A	10	R1/2	19.7	15.7	11.5	29.3	56.5	27.2	12.5	21	60.1
EMP12-01P-A	12	R1/8	18.7	17.8	8	27.9	55.4	27.5	14	14	—
EMP12-02P-A	12	R1/4	18.7	17.8	9	28.9	56.4	27.5	14	14	65.1
EMP12-03P-A	12	R3/8	18.7	17.8	9.5	29.4	56.9	27.5	14	17	68.6
EMP12-04P-A	12	R1/2	18.7	17.8	11.5	31.4	58.9	27.5	14	21	73.7

EMH

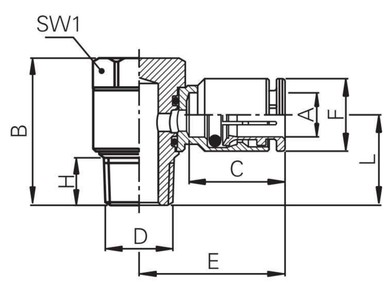

Model	A	D	C	F	L	E	B	SW1	Weight (g)
EMH04-01P-A	4	R1/8	13.5	8	14.5	22.4	25	12	16.5
EMH04-02P-A	4	R1/4	13.5	8	17.5	22.9	29	15	33.7
EMH06-01P-A	6	R1/8	17	11.8	14.5	24.2	25	12	27.9
EMH06-02P-A	6	R1/4	17	11.8	17.5	26.5	29	15	38.7
EMH06-03P-A	6	R3/8	17	11.8	19.5	28.5	33	21	61.7
EMH06-04P-A	6	R1/2	17	11.8	22	30.5	36	24	—
EMH08-01P-A	8	R1/8	17.5	13.6	14.5	25.9	25	12	27.9
EMH08-02P-A	8	R1/4	17.5	13.6	17.5	26.9	29	15	36.6
EMH08-03P-A	8	R3/8	17.5	13.6	19.5	29.3	33	21	61.4
EMH08-04P-A	8	R1/2	17.5	13.6	22	30.8	36	24	89.9
EMH10-01P-A	10	R1/8	19.7	15.7	15.5	30.5	25	12	38.6
EMH10-02P-A	10	R1/4	19.7	15.7	18.5	31.5	29	15	47.9
EMH10-03P-A	10	R3/8	19.7	15.7	19.5	32.6	33	21	72.5
EMH10-04P-A	10	R1/2	19.7	15.7	22	33.5	36	24	86.8
EMH12-02P-A	12	R1/4	18.7	17.8	19.5	30	29	15	47.9
EMH12-03P-A	12	R3/8	18.7	17.8	20.5	32.2	33	21	69.8
EMH12-04P-A	12	R1/2	18.7	17.8	22	33.5	36	24	85.8

Metric Tubing–PT Thread

EMW

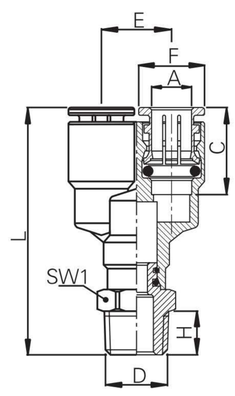

Model	A	D	C	F	L	E	H	SW1	Weight (g)
EMW04-01G-A	4	R1/8	13.5	8	34.3	8.6	9	12	14.2
EMW04-02G-A	4	R1/4	13.5	8	34.3	8.6	9	14	—
EMW06-01G-A	6	R1/8	17	11.8	42.7	12.6	8	12	30
EMW06-02G-A	6	R1/4	17	11.8	43.2	12.6	9	14	40.1
EMW06-03G-A	6	R3/8	17	11.8	43.7	12.6	9.5	17	46.3
EMW06-04G-A	6	R1/2	17	11.8	45.7	12.6	11.5	21	58.7
EMW08-01G-A	8	R1/8	17.5	13.6	49.7	14.5	8	12	43.7
EMW08-02G-A	8	R1/4	17.5	13.6	50.2	14.5	9	14	47.8
EMW08-03G-A	8	R3/8	17.5	13.6	50.7	14.5	9.5	17	58.4
EMW08-04G-A	8	R1/2	17.5	13.6	52.7	14.5	11.5	21	—
EMW10-01G-A	10	R1/8	19.7	15.7	49.5	17	8	14	58.8
EMW10-02G-A	10	R1/4	19.7	15.7	50.5	17	9	14	58.7
EMW10-03G-A	10	R3/8	19.7	15.7	51	17	9.5	17	53.4
EMW10-04G-A	10	R1/2	19.7	15.7	53	17	11.5	21	72.9
EMW12-01G-A	12	R1/8	18.7	17.8	52.9	20	8	17	—
EMW12-02G-A	12	R1/4	18.7	17.8	53.9	20	9	17	80.4
EMW12-03G-A	12	R3/8	18.7	17.8	54.4	20	9.5	17	—
EMW12-04G-A	12	R1/2	18.7	17.8	56.4	20	11.5	21	—

EMLL

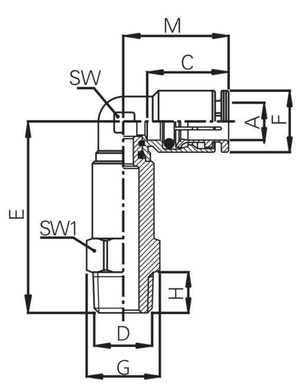

Model	A	D	C	F	M	E	H	G	SW	SW1	Weight (g)
EMLL04-01P-A	4	R1/8	13.5	8	16.6	37.6	8	11.3	6	10	—
EMLL04-02P-A	4	R1/4	13.5	8	16.6	38.6	9	15.8	6	14	—
EMLL06-01P-A	6	R1/8	17	11.8	22	41	8	13.5	—	12	33
EMLL06-02P-A	6	R1/4	17	11.8	22	42	9	15.8	—	14	41.8
EMLL06-03P-A	6	R3/8	17	11.8	22	42.5	9.5	19.1	—	17	—
EMLL06-04P-A	6	R1/2	17	11.8	22	44.5	11.5	23.7	—	21	—
EMLL08-01P-A	8	R1/8	17.5	13.6	22.8	41.3	8	13.5	11.5	12	37.2
EMLL08-02P-A	8	R1/4	17.5	13.6	22.8	42.3	9	15.8	11.5	14	45.4
EMLL08-03P-A	8	R3/8	17.5	13.6	22.8	42.8	9.5	19.1	11.5	17	—
EMLL08-04P-A	8	R1/2	17.5	13.6	22.8	44.8	11.5	23.7	11.5	21	—
EMLL10-01P-A	10	R1/8	19.7	15.7	26.5	46.4	8	15.8	12	14	—
EMLL10-02P-A	10	R1/4	19.7	15.7	26.5	47.4	9	15.8	12	14	53.9
EMLL10-03P-A	10	R3/8	19.7	15.7	26.5	47.9	9.5	19.1	12	17	65
EMLL10-04P-A	10	R1/2	19.7	15.7	26.5	49.9	11.5	23.7	12	21	—
EMLL12-01P-A	12	R1/8	18.7	17.8	27.8	47.9	8	19.1	14	14	—
EMLL12-02P-A	12	R1/4	18.7	17.8	27.8	48.9	9	19.1	14	14	—
EMLL12-03P-A	12	R3/8	18.7	17.8	27.8	49.4	9.5	19.1	14	17	75
EMLL12-04P-A	12	R1/2	18.7	17.8	27.8	51.4	11.5	23.7	14	21	—

EMZT

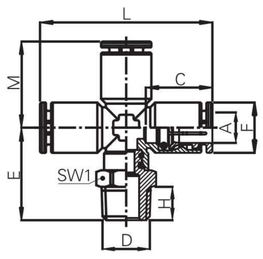

Model	A	D	C	F	M	E	H	L	SW1	Weight (g)
EMZT04-01P-A	4	R1/8	13.5	8	16.2	17.6	8	32.4	10	—
EMZT04-02P-A	4	R1/4	13.5	8	16.2	18.6	9	32.4	14	—
EMZT06-01P-A	6	R1/8	17	11.8	21.6	26	8	43.2	12	35
EMZT06-02P-A	6	R1/4	17	11.8	21.6	27	9	43.2	14	38.9
EMZT08-01P-A	8	R1/8	17.5	13.6	22.3	24	8	44.6	12	46.5
EMZT08-02P-A	8	R1/4	17.5	13.6	22.3	25	9	44.6	14	49.1
EMZT08-03P-A	8	R3/8	17.5	13.6	22.3	25.5	9.5	44.6	17	59.2
EMZT08-04P-A	8	R1/2	17.5	13.6	22.3	27.5	11.5	44.6	21	—
EMZT10-03P-A	10	R3/8	19.7	15.7	27.2	27.3	9.5	54.4	17	—
EMZT12-04P-A	12	R1/2	18.7	17.8	27.5	31.4	11.5	55	21	—

Metric Tubing

EMU

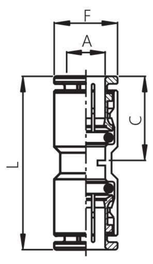

Model	A	F	C	L	Weight (g)
EMU04-A	4	8.0	14	29	5
EMU06-A	6	11.8	17	34	15
EMU08-A	8	13.6	18	36	20
EMU10-A	10	15.7	20	41	27
EMU12-A	12	17.8	19	39	32
EMU14-A	14	20.8	21	44	52
EMU16-A	16	22.8	22	45	63

E•MC®

Metric Tubing

EMY

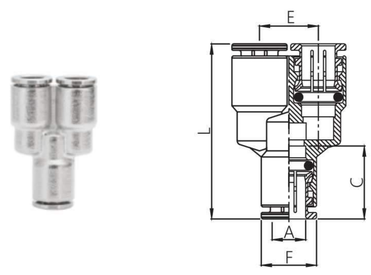

Model	A	F	L	C	E	Weight (g)
EMY04-A	4	8.0	31	14	9	9.2
EMY06-A	6	11.8	38	17	13	28.2
EMY08-A	8	13.6	42	18	15	38.5
EMY10-A	10	15.7	46	20	17	60.2
EMY12-A	12	17.8	47	19	20	68.0

EME

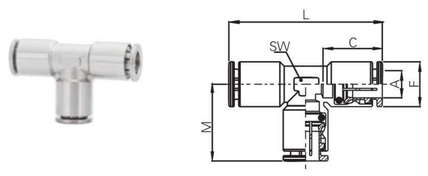

Model	A	F	C	L	M	SW	Weight (g)
EME04-A	4	8.0	14	32	16	6.0	7.9
EME08-A	6	11.8	17	43	22	10.0	28.8
EME06-A	8	13.6	18	45	22	12.0	33.9
EME10-A	10	15.7	20	54	27	12.5	46.1
EME12-A	12	17.8	19	55	28	14.0	52.1
EME14-A	14	20.8	21	60	30	19.0	12.1
EME16-A	16	22.8	22	66	33	19.0	111.1

EMM

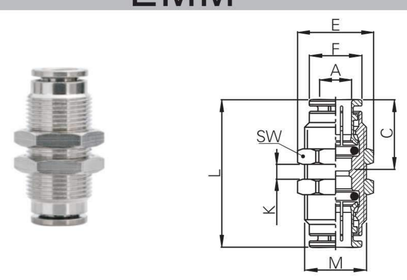

Model	A	F	C	L	M	E	SW	K	Weight (g)
EMM04-A	4	8.0	14	29	M10x1	15.8	14.0	9.0	12
EMM06-A	6	11.8	17	35	M14x1	19.1	17.0	14.0	28
EMM08-A	8	13.6	18	36	M16x1	21.4	19.0	15.0	38
EMM10-A	10	15.7	20	41	M18x1	24.9	22.0	15.0	49
EMM12-A	12	17.8	19	39	M20x1	26.9	24.0	15.0	57
EMM14-A	14	20.8	21	44	M23x1	30.4	27.0	14.0	86
EMM16-A	16	22.8	22	45	M26x1	33.8	30.0	18.0	106

EMV

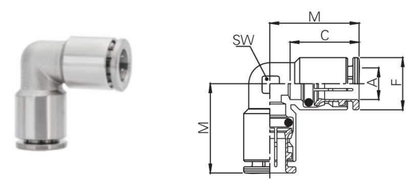

Model	A	F	M	C	SW	Weight (g)
EMV04-A	4	8.0	16	14	6	5.8
EMV06-A	6	11.8	22	17	10	18.8
EMV08-A	8	13.6	22	18	12	24.0
EMV10-A	10	15.7	27	20	13	29.5
EMV12-A	12	17.8	28	19	14	40.9
EMV14-A	14	20.8	30	21	19	89.6
EMV16-A	16	22.8	33	22	19	83.3

EMZA

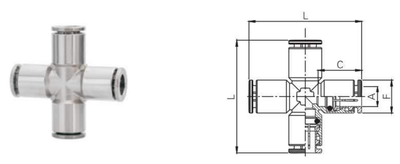

Model	A	F	C	L	Weight (g)
EMZA04-A	4	8.0	14	32	11
EMZA06-A	6	11.8	17	43	34
EMZA08-A	8	13.6	18	45	39
EMZA10-A	10	15.7	20	54	60
EMZA12-A	12	17.8	19	55	79

EMG

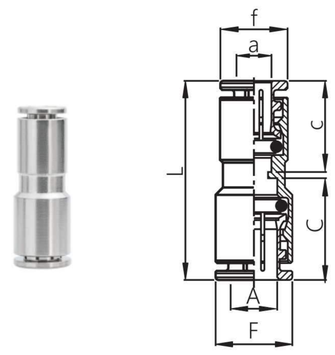

Model	A	F	C	L	a	f	c	Weight (g)
EMG06-04-A	6	11.8	17	30.8	4	8	13.5	12.5
EMG08-04-A	8	13.6	17.5	32.2	4	8	13.5	13.6
EMG08-06-A	8	13.6	17.5	34.8	6	11.8	17	18.4
EMG10-06-A	10	15.7	19.7	37.1	6	11.8	17	22.7
EMG10-08-A	10	15.7	19.7	38.4	8	13.6	17.5	22.8
EMG12-08-A	12	17.8	18.7	37.8	8	13.6	17.5	27.4
EMG12-10-A	12	17.8	18.7	40.1	10	15.7	19.7	29
EMG16-12-A	16	22.8	21.5	41.8	12	17.8	18.7	45.5
EMG16-14-A	16	22.8	21.5	44.7	14	20.8	20.5	59.5

Metric Tubing–G Thread

EMC

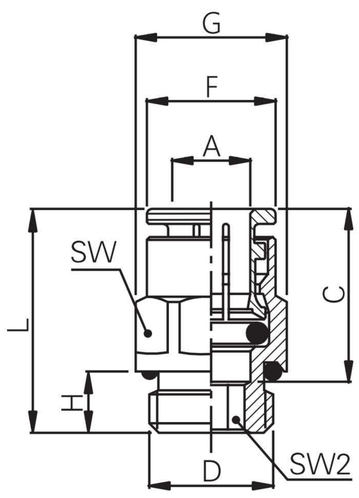

Model	A	D	C	F	L	G	H	SW	SW2	Weight (g)
EMC04-M5-A	4	M5	14	8	19	8.9	3.6	8.0	—	3.6
EMC04-01G-A	4	G1/8	14	8	18	11.8	5.0	10.0	3	8.8
EMC04-02G-A	4	G1/4	14	8	18	16.0	6.5	12.0	—	9.0
EMC06-M5-A	6	M5	17	12	22	13.5	3.6	12.0	—	10.1
EMC06-01G-A	6	G1/8	17	12	21	13.5	5.0	12.0	4	10.7
EMC06-02G-A	6	G1/4	17	12	22	16.0	6.5	12.0	4	13.1
EMC06-03G-A	6	G3/8	17	12	18	21.5	7.5	19.0	—	14.0
EMC06-04G-A	8	G1/2	17	12	20	28.0	9.0	24.0	—	37.4
EMC08-01G-A	8	G1/8	17.5	13.6	24.6	16	5	14	5	16.4
EMC08-02G-A	8	G1/4	18	14	23	16.0	6.5	14.0	6	15.2
EMC08-03G-A	8	G3/8	18	14	21	21.5	7.5	19.0	6	15.7
EMC08-04G-A	10	G1/2	18	14	21	28.0	9.0	24.0	—	39.6
EMC10-01G-A	10	G1/8	20	16	27	19.1	5.0	17.0	5	22.4
EMC10-02G-A	10	G1/4	20	16	29	19.1	6.5	17.0	6	25.1
EMC10-03G-A	10	G3/8	20	16	26	21.5	7.5	19.0	8	30.0
EMC10-04G-A	12	G1/2	20	16	24	28.0	9.0	24.0	8	39.7
EMC12-01G-A	12	G1/8	19	18	27	21.5	5.0	19.0	5	25.1
EMC12-02G-A	12	G1/4	18.7	17.8	29	21.5	6.5	19	6	25.5
EMC12-03G-A	12	G3/8	19	18	30	21.5	7.5	19.0	8	28.0
EMC12-04G-A	14	G1/2	19	18	27	28.0	9.0	24.0	—	36.4
EMC14-03G-A	14	G3/8	21	21	31	24.0	7.5	21.0	—	40.0
EMC14-04G-A	16	G1/2	21	21	29	28.0	9.0	24.0	—	48.1
EMC16-03G-A	16	G3/8	22	23	32	28.0	7.5	24.0	—	49.0
EMC16-04G-A		G1/2	22	23	34	28.0	9.0	24.0	—	60.6

EMOC

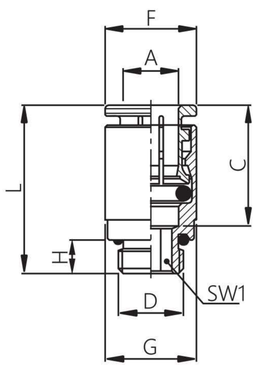

Model	D	C	F	L	G	H	SW1	Weight (g)
EMOC04-M5-A	M5	13.5	8	18.2	8	3.6	2.5	3.6
EMOC04-01G-A	G1/8	13.5	8	17.6	11.8	5	2.5	6.9
EMOC06-M5-A	M5	17	11.8	26.5	11.8	3.6	2.5	9.4
EMOC06-01G-A	G1/8	17	11.8	21.2	11.8	5	4	8.7
EMOC06-02G-A	G1/4	17	11.8	21.8	16	6.5	4	13.5
EMOC08-01G-A	G1/8	17.5	13.6	26.5	13.8	5	5	12.6
EMOC08-02G-A	G1/4	17.5	13.6	23.2	16	6.5	6	14.7
EMOC08-03G-A	G3/8	17.5	13.6	21	19	7	6	—
EMOC10-02G-A	G1/2	19.7	15.7	28.6	16	6.5	6	19.8
EMOC10-03G-A	G3/8	19.7	15.7	26.1	19	7	8	—
EMOC12-02G-A	G1/4	18.7	17.8	28	18.5	6.5	6	—
EMOC12-03G-A	G3/8	18.7	17.8	27.2	19	7	8	—
EMOC12-04G-A	G1/2	18.7	17.8	25.7	24	9	8	—

EML

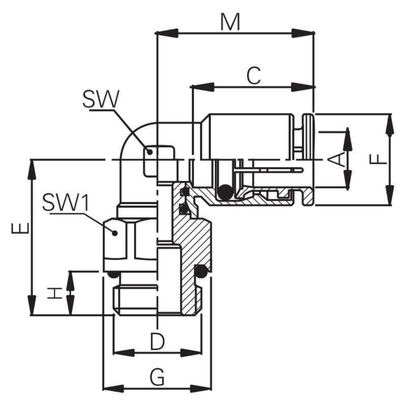

Model	A	D	C	F	M	E	H	G	SW	SW1	Weight (g)
EML04-M5-A	4	M5	13.5	8	16.6	18	3.6	8.9	6	8	8.1
EML04-01G-A	4	G1/8	13.5	8	16.6	15	5	13.5	6	12	10.9
EML04-02G-A	4	G1/4	13.5	8	16.6	16.5	6.5	18	6	16	17
EML06-M5-A	6	M5	17.0	11.8	22.0	19.0	11.6	3	—	10	16
EML06-01G-A	6	G1/8	17	11.8	22	18	5	13.5	—	12	20
EML06-02G-A	6	G1/4	17	11.8	22	19.5	6.5	18	—	16	22.9
EML06-03G-A	6	G3/8	17	11.8	22	21	7.5	21.5	—	19	30.1
EML06-04G-A	6	G1/2	17	11.8	22	23	9	28	11.5	24	41
EML08-01G-A	8	G1/8	17.5	13.6	22.8	18.5	5	13.5	11.5	12	21.6
EML08-02G-A	8	G1/4	17.5	13.6	22.8	20	6.5	18	11.5	16	26.9
EML08-03G-A	8	G3/8	17.5	13.6	22.8	21.5	7.5	21.5	11.5	19	33
EML08-04G-A	8	G1/2	17.5	13.6	22.8	23.5	9	28	12	24	34.1
EML10-01G-A	10	G1/8	19.7	15.7	26.5	23.5	5	16	12	14	29.4
EML10-02G-A	10	G1/4	19.7	15.7	26.5	25.5	6.5	18	12	16	35.1
EML10-03G-A	10	G3/8	19.7	15.7	26.5	26	7.5	21.5	12	19	37.5
EML10-04G-A	10	G1/2	19.7	15.7	26.5	28.5	9	28	14	24	52.4
EML12-01G-A	12	G1/8	18.7	17.8	27.8	24.9	5	18	14	16	38
EML12-02G-A	12	G1/4	18.7	17.8	27.8	26.9	6.5	18	14	16	41.4
EML12-03G-A	12	G3/8	18.7	17.8	27.8	28	7.5	21.5	14	19	45.9
EML12-04G-A	12	G1/2	18.7	17.8	27.8	30	9	28	19	24	61.2
EML14-03G-A	14	G3/8	20.5	20.8	30	31.9	7.5	21.5	19	19	93.9
EML14-04G-A	14	G1/2	20.5	20.8	30	34.9	9	28	19	24	85.7
EML16-03G-A	16	G3/8	21.5	22.8	32.3	31.9	7.5	21.5	19	19	—
EML16-04G-A	16	G1/2	21.5	22.8	32.3	34.9	9	28	19	24	—

E·MC®

Metric Tubing–G Thread

EMB

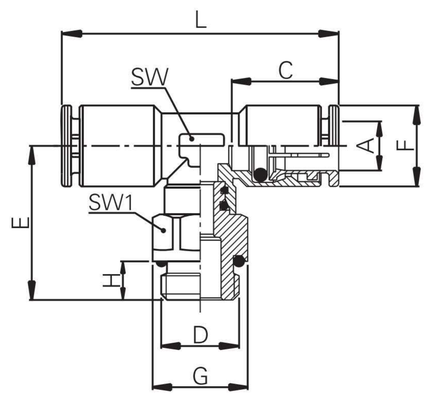

Model	A	D	C	F	L	E	G	H	SW1	SW	Weight (g)
EMB04-M5-A	4	M5	13.5	8	32.4	18.6	8.9	3.6	8	6	9.9
EMB04-01G-A	4	G1/8	13.5	8	32.4	17.1	13.5	5	12	6	13.2
EMB04-02G-A	4	G1/4	13.5	8	32.4	18.6	16	7	12	6	18.2
EMB06-M5-A	6	M5	17	11.8	43.2	23.1	11.3	3.6	10	10	25.3
EMB06-01G-A	6	G1/8	17	11.8	43.2	26	13.8	5	12	10	27.4
EMB06-02G-A	6	G1/4	17	11.8	43.2	26	16	7	12	10	31.5
EMB06-03G-A	6	G3/8	17	11.8	43.2	26.3	21.4	7	19	10	—
EMB06-04G-A	8	G1/2	17	11.8	43.2	28	26.9	9	24	10	—
EMB08-01G-A	8	G1/8	17.5	13.6	44.6	24	13.8	5	12	12	34.2
EMB08-02G-A	8	G1/4	17.5	13.6	44.6	24	16	7	12	12	39.2
EMB08-03G-A	8	G3/8	17.5	13.6	44.6	24.3	21.4	7	19	12	47.7
EMB08-04G-A	8	G1/2	17.5	13.6	44.6	26	26.9	9	24	12	—
EMB10-01G-A	10	G1/8	19.7	15.7	54.4	22.8	15.8	5	14	12.5	—
EMB10-02G-A	10	G1/4	19.7	15.7	54.4	26.1	17.9	7	16	12.5	48.8
EMB10-03G-A	10	G3/8	19.7	15.7	54.4	26.1	21.4	7	19	12.5	52.5
EMB10-04G-A	10	G1/2	19.7	15.7	54.4	27.8	26.9	9	24	12.5	62.6
EMB12-01G-A	12	G1/8	18.7	17.8	55	24.9	17.9	5	16	14	—
EMB12-02G-A	12	G1/4	18.7	17.8	55	28.2	17.9	7	16	14	67.2
EMB12-03G-A	12	G3/8	18.7	17.8	55	28.2	21.4	7	19	14	66.6
EMB12-04G-A	12	G1/2	18.7	17.8	55	29.9	26.9	9	24	14	77.2
EMB14-03G-A	14	G3/8	20.5	20.8	60.4	33.2	23.7	7	21	19	—
EMB14-04G-A	14	G1/2	20.5	20.8	60.4	34.9	26.9	9	24	19	—
EMB16-03G-A	16	G3/8	21.5	22.8	66	33.2	23.7	7	21	19	—
EMB16-04G-A	16	G1/2	21.5	22.8	66	34.9	26.9	9	24	19	—

EMP

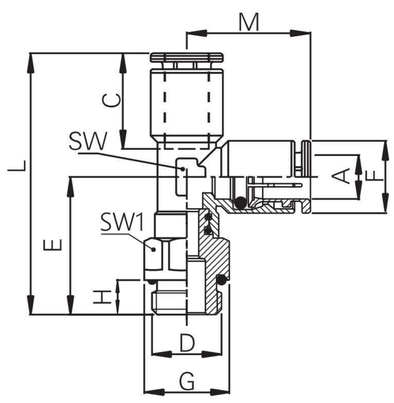

Model	A	D	C	F	L	E	G	M	H	SW	SW1	Weight (g)
EMP04-M5-A	4	M5	13.5	8.0	35	18.6	8.9	16.2	3.6	8	6	10
EMP04-01G-A	4	G1/8	13.5	8	33.3	17.1	13.5	16.2	5	12	6	14.2
EMP04-02G-A	4	G1/4	13.5	8	34.8	18.6	16	16.2	7	12	6	18.8
EMP04-M5-A	6	M5	17	11.8	44.7	23.1	11.3	21.6	3.6	10	10	26
EMP06-01G-A	6	G1/8	17	11.8	47.6	26	13.8	21.6	5	12	10	30.7
EMP06-02G-A	6	G1/4	17	11.8	47.6	26	16	21.6	7	12	10	—
EMP06-03G-A	6	G3/8	17	11.8	47.9	26.3	21.4	21.6	7	19	10	—
EMP06-04G-A	8	G1/2	17	11.8	49.6	28	26.9	21.6	9	24	10	—
EMP08-01G-A	8	G1/8	17.5	13.6	46.3	24	13.8	22.3	5	12	12	—
EMP08-02G-A	8	G1/4	17.5	13.6	46.3	24	16	22.3	7	12	12	43
EMP08-03G-A	8	G3/8	17.5	13.6	46.6	24.3	21.4	22.3	7	19	12	46
EMP08-04G-A	8	G1/2	17.5	13.6	48.3	26	26.9	22.3	9	24	12	—
EMP10-01G-A	10	G1/8	19.7	15.7	50	22.8	15.8	27.2	5	14	12.5	45
EMP10-02G-A	10	G1/4	19.7	15.7	53.3	26.1	17.9	27.2	7	16	12.5	46
EMP10-03G-A	10	G3/8	19.7	15.7	53.3	26.1	21.4	27.2	7	19	12.5	49
EMP10-04G-A	10	G1/2	19.7	15.7	55	27.8	26.9	27.2	9	24	12.5	63
EMP12-01G-A	12	G1/8	18.7	17.8	52.4	24.9	17.9	27.5	5	16	14	—
EMP12-02G-A	12	G1/4	18.7	17.8	55.7	28.2	17.9	27.5	7	16	14	—
EMP12-03G-A	12	G3/8	18.7	17.8	55.7	28.2	21.4	27.5	7	19	14	—
EMP12-04G-A	12	G1/2	18.7	17.8	57.4	29.9	26.9	27.5	9	24	14	—

EMH

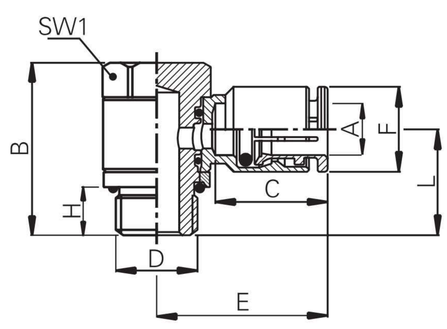

Model	A	D	C	F	B	E	G	M	H	SW1	Weight (g)
EMH04-M5-A	4	M5	13.5	8	19	18	8.9	16.2	3.6	8	10.9
EMH04-01G-A	4	G1/8	13.5	8	25	22.4	13.5	16.2	5	12	19
EMH04-02G-A	4	G1/4	13.5	8	29	22.9	16	16.2	7	15	32.6
EMH06-M5-A	6	M5	17	11.8	19	21	11.3	21.6	3.6	8	14.8
EMH06-01G-A	6	G1/8	17	11.8	25	24.2	13.8	21.6	5	12	26.1
EMH06-02G-A	6	G1/4	17	11.8	29	26.5	16	21.6	7	15	34.5
EMH06-03G-A	6	G3/8	17	11.8	33	28.5	21.4	21.6	7	21	61.7
EMH06-04G-A	6	G1/2	17	11.8	36	30.5	26.9	21.6	9	24	82.7
EMH08-01G-A	8	G1/8	17.5	13.6	25	25.9	13.8	22.3	5	12	26.5
EMH08-02G-A	8	G1/4	17.5	13.6	29	26.9	16	22.3	7	15	33.5
EMH08-03G-A	8	G3/8	17.5	13.6	33	29.3	21.4	22.3	7.5	21	—
EMH08-04G-A	8	G1/2	17.5	13.6	36	30.8	26.9	22.3	9	24	77.6
EMH10-01G-A	10	G1/8	19.7	15.7	25	30.5	15.8	27.2	5	12	38.7
EMH10-02G-A	10	G1/4	19.7	15.7	29	31.5	17.9	27.2	7	15	47
EMH10-03G-A	10	G3/8	19.7	15.7	33	32.6	21.4	27.2	7	21	72.5
EMH10-04G-A	10	G1/2	19.7	15.7	36	33.5	26.9	27.2	9	24	—
EMH12-02G-A	12	G1/4	18.7	17.8	29	30	17.9	27.5	7	15	77.8
EMH12-03G-A	12	G3/8	18.7	17.8	33	32.2	17.9	27.5	7	21	70
EMH12-04G-A	12	G1/2	18.7	17.8	36	33.5	21.4	27.5	9	24	85.6
EMH16-04G-A	16	G1/4	21.5	22.8	36	40.8	26.9	27.5	9	24	—

Metric Tubing–G Thread

EMW

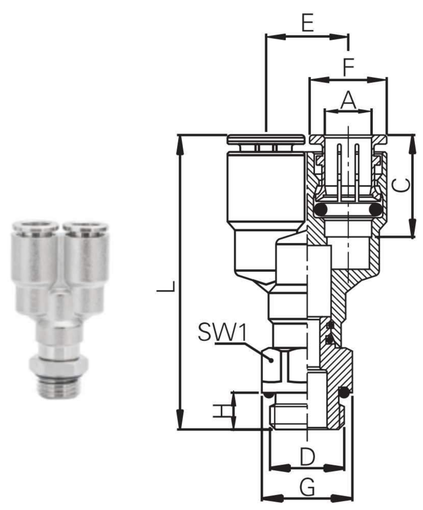

Model	A	D	C	F	L	E	G	H	SW1	Weight (g)
EMW04-M5-A	4	M5	14	8	32	9	9	4	8	13
EMW04-01G-A	4	G1/8	13.5	8	34.3	8.6	13.5	5	12	—
EMW04-02G-A	4	G1/4	13.5	8	34.3	8.6	16	7	12	—
EMW06-M5-A	6	M5	17	11.8	40.7	12.6	11.3	3.6	10	27.8
EMW06-01G-A	6	G1/8	17	11.8	42.7	12.6	13.8	5	12	37.5
EMW06-02G-A	6	G1/4	17	11.8	43.2	12.6	16	7	12	—
EMW06-03G-A	6	G3/8	17	11.8	43.2	12.6	21.4	7	19	—
EMW06-04G-A	8	G1/2	17	11.8	45.7	12.6	26.9	9	24	—
EMW08-01G-A	8	G1/8	17.5	13.6	49.7	14.5	13.8	5	12	—
EMW08-02G-A	8	G1/4	17.5	13.6	49.7	14.5	16	7	12	46.1
EMW08-03G-A	8	G3/8	17.5	13.6	50.7	14.5	21.4	7	19	—
EMW08-04G-A	8	G1/2	17.5	13.6	52.7	14.5	26.9	9	24	—
EMW10-01G-A	10	G1/8	19.7	15.7	49.5	17	15.8	5	14	—
EMW10-02G-A	10	G1/4	19.7	15.7	49.5	17	17.9	7	16	—
EMW10-03G-A	10	G3/8	19.7	15.7	51	17	21.4	7	19	66.7
EMW10-04G-A	10	G1/2	19.7	15.7	53	17	26.9	9	24	—
EMW12-01G-A	12	G1/8	18.7	17.8	52.9	20	17.9	5	16	—
EMW12-02G-A	12	G1/4	18.7	17.8	52.9	20	17.9	7	16	—
EMW12-03G-A	12	G3/8	18.7	17.8	54.4	20	21.4	7	19	—
EMW12-04G-A	12	G1/2	18.7	17.8	56.4	20	26.9	9	24	—
EMW14-04G-A	14	G1/2	20.5	20.8	60	25	26.9	9	24	—

EMLL

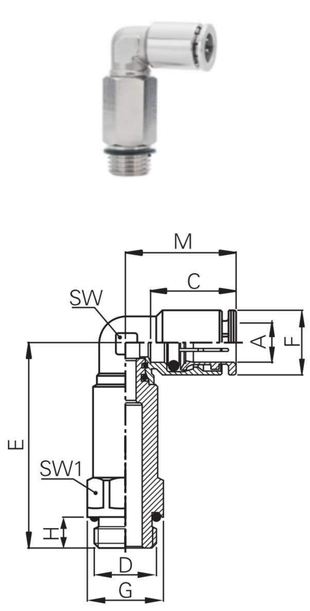

Model	A	D	C	F	M	E	G	H	SW	SW1	Weight (g)
EMLL04-M5-A	4	M5	14	8	17	32	9	4	6	8	—
EMLL04-01G-A	4	G1/8	13.5	8	16.6	37.6	13.5	5	6	12	—
EMLL04-02G-A	4	G1/4	13.5	8	16.6	37.1	16	7	6	12	—
EMLL06-M5-A	6	M5	17	11.8	22	35	11.3	3.6	—	10	25.5
EMLL06-01G-A	6	G1/8	17	11.8	22	41	13.8	5	—	12	—
EMLL06-02G-A	6	G1/4	17	11.8	22	41	16	7	—	12	—
EMLL06-03G-A	6	G3/8	17	11.8	22	40.5	21.4	7	—	19	—
EMLL06-04G-A	8	G1/2	17	11.8	22	42.9	26.9	9	—	24	—
EMLL08-01G-A	8	G1/8	17.5	13.6	22.8	41.3	13.8	5	11.5	12	37.2
EMLL08-02G-A	8	G1/4	17.5	13.6	22.8	41.3	16	7	11.5	12	45.5
EMLL08-03G-A	8	G3/8	17.5	13.6	22.8	40.8	21.4	7.5	11.5	19	—
EMLL08-04G-A	8	G1/2	17.5	13.6	22.8	43.2	26.9	9	11.5	24	—
EMLL10-01G-A	10	G1/8	19.7	15.7	26.5	43.4	19.1	5	12	14	—
EMLL10-02G-A	10	G1/4	19.7	15.7	26.5	45.4	19.1	7	12	16	52.2
EMLL10-03G-A	10	G3/8	19.7	15.7	26.5	45.9	21.4	7	12	19	—
EMLL10-04G-A	10	G1/2	19.7	15.7	26.5	48.3	26.9	9	12	24	—
EMLL12-01G-A	12	G1/8	18.7	17.8	27.8	45.9	17.9	5	14	16	—
EMLL12-02G-A	12	G1/4	18.7	17.8	27.8	46.9	17.9	7	14	16	—
EMLL12-03G-A	12	G3/8	18.7	17.8	27.8	47.4	21.4	7.5	14	19	—
EMLL12-04G-A	12	G1/2	18.7	17.8	27.8	49.9	26.9	9	14	24	—

EMMF

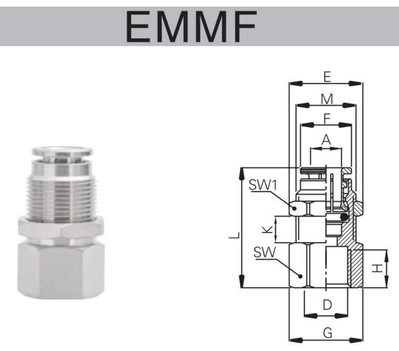

Model	A	D	F	C	E	M	H	G	L	SW	SW1	K	Weight (g)
EMMF04-M5-A	4	M5	8	13.5	6	M10x1	6	13.5	21.2	12	14	7	4.5
EMMF04-01G-A	4	G1/8	8	13.5	15.8	M10x1	8	13.5	25.1	12	14	7	9
EMMF04-02G-A	4	G1/4	8	13.5	15.8	M10x1	11	19.1	28.5	17	14	7	17
EMMF06-01G-A	6	G1/8	11.8	17	19.1	M14x1	8	17.9	27.4	16	17	9.5	12.4
EMMF06-02G-A	6	G1/4	11.8	17	19.1	M14x1	11	17.9	31	16	17	9	21
EMMF08-01G-A	8	G1/8	13.6	17.5	21.4	M16x1	8	19.1	27.5	17	19	9	17
EMMF08-02G-A	8	G1/4	13.6	17.5	21.4	M16x1	11	19.1	29.5	17	19	9	23.7
EMMF10-03G-A	10	G3/8	15.7	19.7	24.9	M18x1	11.5	23.7	34	21	22	9	26

E·MC®

Metric Tubing–G Thread

EMCF	Model	A	D	C	F	L	G	H	SW	Weight (g)
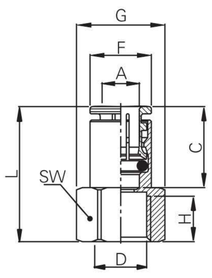	EMCF04-M5-A	4	M5	13.5	8	20.6	8.9	6	8	4.6
	EMCF04-01G-A	4	G1/8	13.5	8	22.6	13.5	8	12	9.2
	EMCF04-02G-A	4	G1/4	13.5	8	25.6	19.1	11	17	16.9
	EMCF06-M5-A	6	M5	17	11.8	23.2	13.5	6	12	12.6
	EMCF06-01G-A	6	G1/8	17	11.8	26.4	13.5	8	12	13.7
	EMCF06-02G-A	6	G1/4	17	11.8	29.4	19.1	11	17	21.3
	EMCF06-03G-A	6	G3/8	17	11.8	30	21.4	11.5	19	22.1
	EMCF06-04G-A	6	G1/2	17	11.8	31	26.9	12.5	24	23.4
	EMCF08-01G-A	8	G1/8	17.5	13.6	27.5	15.8	8	14	18.7
	EMCF08-02G-A	8	G1/4	17.5	13.6	29.5	19.1	11	17	23.4
	EMCF08-03G-A	8	G3/8	17.5	13.6	30	21.4	11.5	19	24.9
	EMCF08-04G-A	8	G1/2	17.5	13.6	31	26.9	12.5	24	35.9
	EMCF10-01G-A	10	G1/8	19.7	15.7	29.6	19.1	8	17	27.5
	EMCF10-02G-A	10	G1/4	19.7	15.7	31.6	19.1	11	17	25.8
	EMCF10-03G-A	10	G3/8	19.7	15.7	32.1	21.4	11.5	19	27.5
	EMCF10-04G-A	10	G1/2	19.7	15.7	33.1	26.9	12.5	24	38.8
	EMCF12-01G-A	12	G1/8	18.7	17.8	27.7	21.4	8	19	—
	EMCF12-02G-A	12	G1/4	18.7	17.8	30.7	21.4	11	19	33.5
	EMCF12-03G-A	12	G3/8	18.7	17.8	31.2	21.4	11.5	19	31.2
	EMCF12-04G-A	12	G1/2	18.7	17.8	32.2	26.9	12.5	24	37.8

Speed Controller

Features

Used for speed control of driving unit.
Pipe connection kept 360° changeable even after installed.
All taped thread fittings are coated with sealant.
All parallel thread fittings are fitted with O–ring.

Warning

When the needle opened slowly from the "completely closed"; it is dangerous because the actuator may be sudden come out" while adjusting of the needle in case of it is opened. It should be operating in secure, Clockwise to Hoffn, counterclockwise to "on" Don't swing or rotate the products forcibly,it may result in damage or cause leakage.

Note

To a certain extent, the few air leakage of Speed Control is allowed when it is in a completely closed situation because of it is design, Please don't use it in the environment required no air leakage.

Exhaust Control out

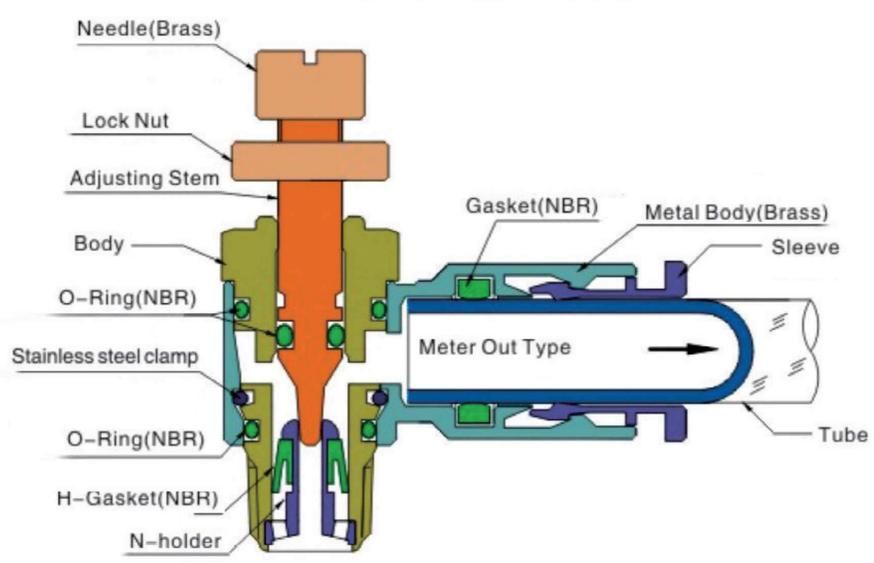

Entering air Control in

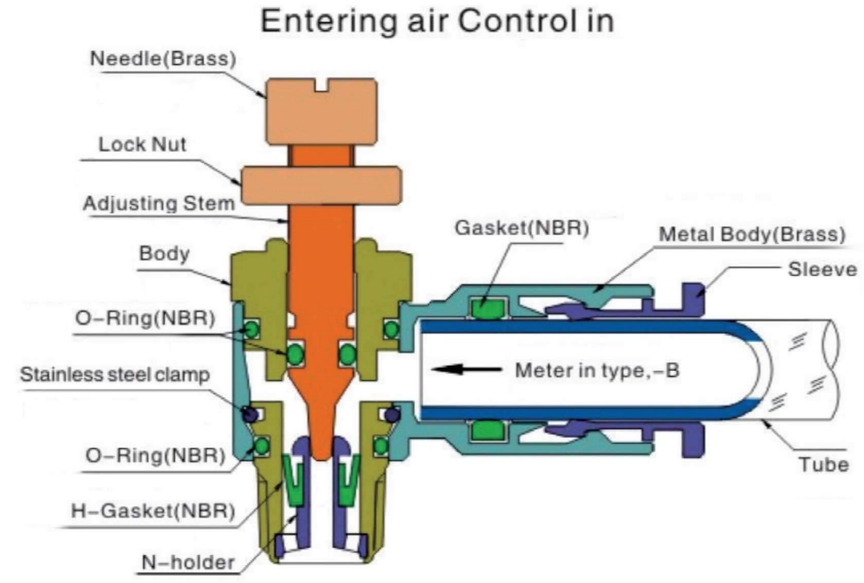

Specifications

Fluid	Air (no other gases or liquids)
Operating Pressure	0.1-1.0MPa(15-150psi)
Max Pressure	1.5MPa(225psi)
Operating Temperature	0-60℃(32-140°F)
Applicable Tube	Polyurethane and Nylon

Control Methods

Exhaust Control out

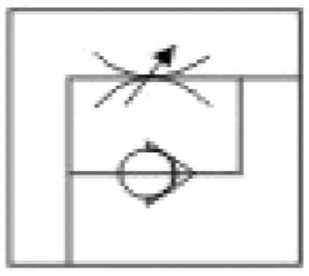

EMSC06–01

Entering air Control in

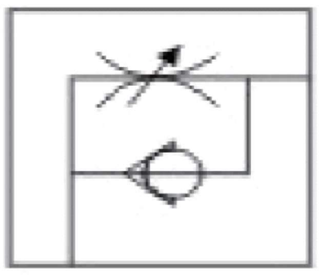

EMSC06–01–B

When you order control in type, please put B at the end of model type. For example,EMSC06–01–B.

EMSC

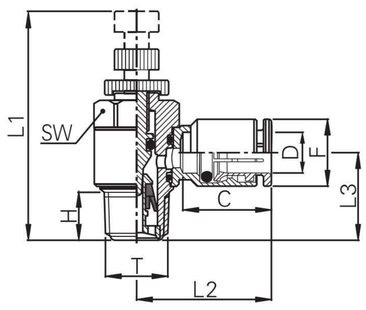

Model	D	L1	L2	L3	C	F	SW	T	H
EMSC04-01P-A	4.0	37.5	21.0	15.0	13.5	8.0	12.0	R1/8	8.0
EMSC04-02P-A	4.0	43.0	23.0	18.0	13.5	8.0	15.0	R1/4	9.0
EMSC06-01P-A	6.0	37.5	23.0	15.0	17.0	11.8	12.0	R1/8	8.0
EMSC06-02P-A	6.0	43.0	24.0	18.0	17.0	11.8	15.0	R1/4	9.0
EMSC06-03P-A	6.0	57.0	26.0	20.0	17.0	11.8	21.0	R3/8	9.5
EMSC06-04P-A	6.0	61.0	28.0	22.5	17.0	11.8	24.0	R1/2	11.5
EMSC08-01P-A	8.0	37.5	25.0	15.0	17.5	13.6	12.0	R1/8	8.0
EMSC08-02P-A	8.0	43.0	26.0	18.0	17.5	13.6	15.0	R1/4	9.0
EMSC08-03P-A	8.0	57.0	28.0	20.0	17.5	13.6	21.0	R3/8	9.5
EMSC08-04P-A	8.0	61.0	30.5	22.5	17.5	13.6	24.0	R1/2	11.5
EMSC10-01P-A	10.0	37.5	27.0	16.0	19.7	15.7	12.0	R1/8	8.0
EMSC10-02P-A	10.0	43.0	128.0	19.0	19.7	15.7	15.0	R1/4	9.0
EMSC10-03P-A	10.0	57.0	30.0	20.0	19.7	15.7	21.0	R3/8	9.5
EMSC10-04P-A	10.0	61.0	30.0	22.5	19.7	15.7	24.0	R1/2	11.5
EMSC12-02P-A	12.0	43.0	20.0	20.0	18.7	17.8	15.0	R1/8	9.0
EMSC12-03P-A	12.0	57.0	31.0	21.0	18.7	17.8	21.0	R1/4	9.5
EMSC16-04P-A	12.0	61.0	31.0	22.5	18.7	17.8	22.0	R1/2	11.5
EMSC16-04P-A	16.0	61.0	40.8	22.5	21.5	22.8	24.0	R1/2	11.5

EMSC

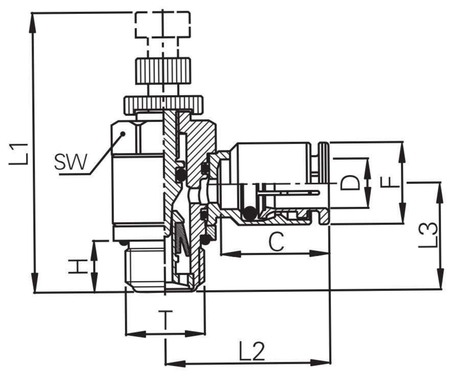

Model	D	L1	L2	L3	C	F	SW	T	H
EMSC04-M5-A	4	31	18	10	14	8	12	M5	3.6
EMSC04-01G-A	4	38	21	15	14	8	12	G1/8	5
EMSC04-02G-A	4	43	23	18	14	8	15	G1/4	7
EMSC06-M5-A	6	31	21	11	17	12	12	M5	3.6
EMSC06-01G-A	6	38	23	15	17	12	12	G1/8	5
EMSC06-02G-A	6	43	24	18	17	12	15	G1/4	7
EMSC06-03G-A	6	57	26	20	17	12	21	G3/8	7.5
EMSC06-04G-A	6	61	28	23	17	12	24	G1/2	9
EMSC08-01G-A	8	38	25	15	18	14	12	G1/8	5
EMSC08-02G-A	8	43	26	18	18	14	15	G1/4	7
EMSC08-03G-A	8	57	28	20	18	14	21	G3/8	7.5
EMSC08-04G-A	8	61	31	23	18	14	24	G1/2	9
EMSC10-01G-A	10	38	27	16	20	16	12	G1/8	5
EMSC10-02G-A	10	43	128	19	20	16	15	G1/4	7
EMSC10-03G-A	10	57	30	20	20	16	21	G3/8	7.5
EMSC10-04G-A	10	61	30	23	20	16	24	G1/2	9
EMSC12-02G-A	12	43	20	20	19	18	15	G1/4	7
EMSC12-03G-A	12	57	31	21	19	18	21	G3/8	7.5
EMSC12-04G-A	12	61	31	23	19	18	22	G1/2	9
EMSC16-04G-A	16	61	41	26	22	23	24	G1/2	9