EZP

Vacuum Pump

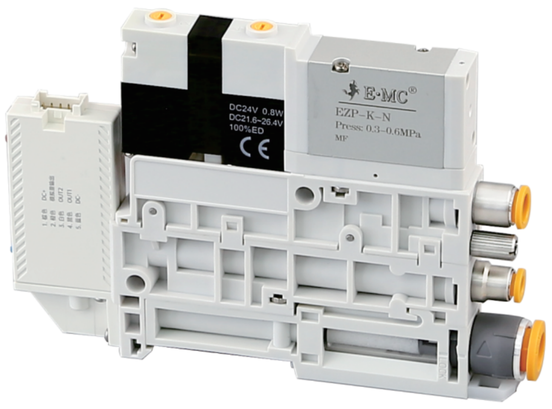

Applications / Features

- Built in low power solenoid valve has higher stability and longer service life.
- Built in intergarted external vacuum control, vacuum breaking control, vacuum breaking flow regulating, vacuum pressure gauge, vacuum filtration, air supply filtration.
- Two installation modes, including intergarted lateral hole installation, 35mm clamp rail stallation.
- Built in quick replaceable vacuum filter makes installation and removal faster.
- External vacuum supply valve, optionally equipped with self–holding type.

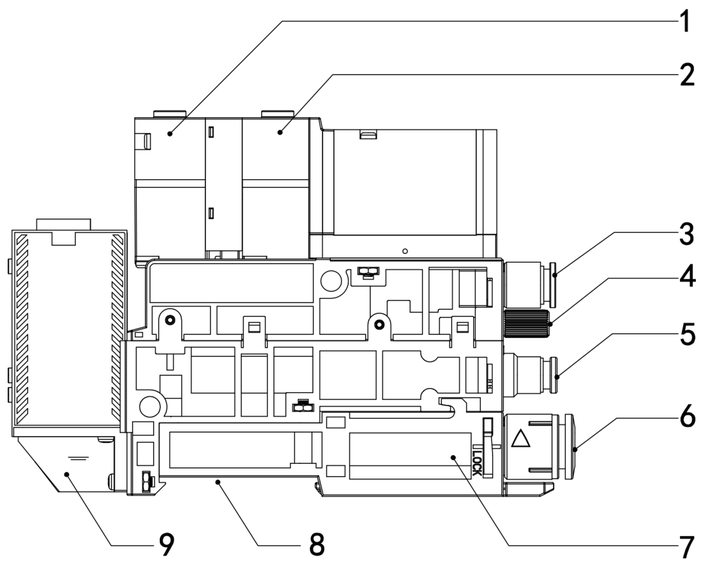

1. Vacuum breaking valve (Positive pressure vacuum blowback control the power–on green light is on)
2. Vacuum supply valve (External vacuum control the power–on red light is on)
3. External vacuum interface (ϕ 6)
4. Positive pressure vacuum blowback flow regulating valve
5. Positive pressure air intake (ϕ 4)
6. Vacuum chuck port interface (ϕ 6/ ϕ 8)
7. Vacuum filtration observation window
8. 35mm clamp rail installation
9. Digital Pressure Switch (Optional)

How to Order?

Series NO	—	□	—	Vacuum Gauge Specification	—	Vacuum Chuck Port Interface	—	Mounting Bracket

EZP：EZP series

Code	Supple Valve	Air Breaking Valve
K	NC	NC
R	Self–holding type	NC

Note: When the R–type is energized for more than 20ms, supply valve open and hold, vacuum breaking valve is energized, and supply valve stop.

Without:Without
N: Type NPN
P: Type PNP

06: insert Ø6 tube
08: insert Ø8 tube

Without: Without (default)
B: L–type mounting bracket

Order Example: EZP series Vacuum Pump, vacuum supply valve NC, vacuum breaking valve NC, NPN Type vacuum gauge, insert ϕ 8 tube, with L–type mounting bracket, the ERP code is: EZP–K–N–08–B

Max. Suction Flow of Different Degrees (–kPa) (NL/min)

Specifications and Models	-10	-20	-30	-40	-50	-60	-70	-80	-90
EZP-	9.3	17	21	22	23	23	24	24	24.5

Max. Suction Flow of Different Degrees (-kPa) (NL/min)

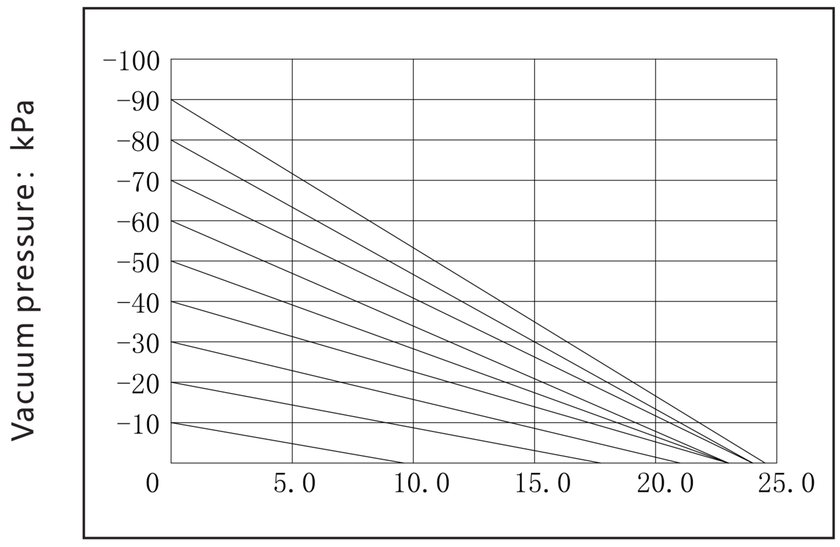

Max. Blowbacl Flow of Different Degrees(NL/min)

Specifications and Models	0.30MPa	0.35MPa	0.45MPa	0.50MPa	0.55MPa	0.60MPa
EZP-	50	60	75	80	85	90

Max. Blowbacl Flow of Different Degrees (NL/min)

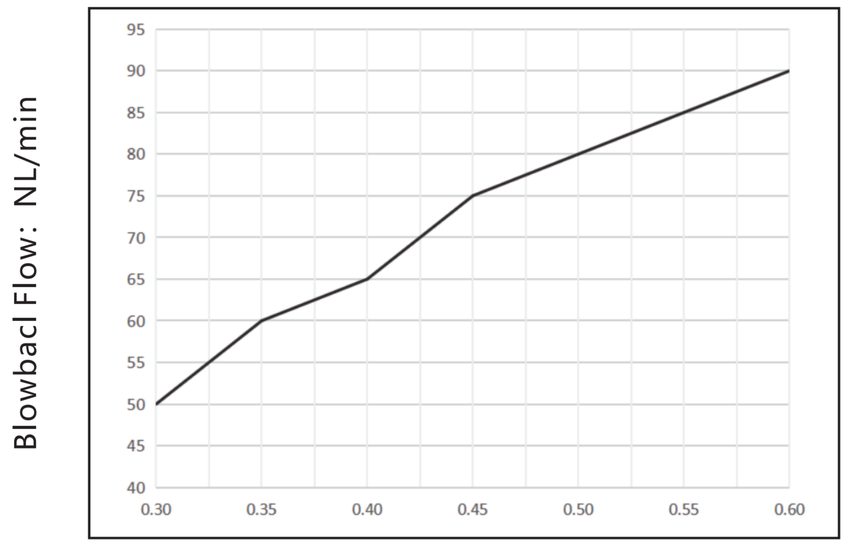

Performance Parameter

Specifications and Models	Supply Pressure (Mpa)	Max. Suction Flow (NL/min)	External Vacuum Interface(mm)	Vacuum Chuck Port Interface (mm)	Positive Pressure Air Intake(mm)
EZP-	0.3-0.6	24.5	∅6	∅6 /∅8	∅4

Main Dimension

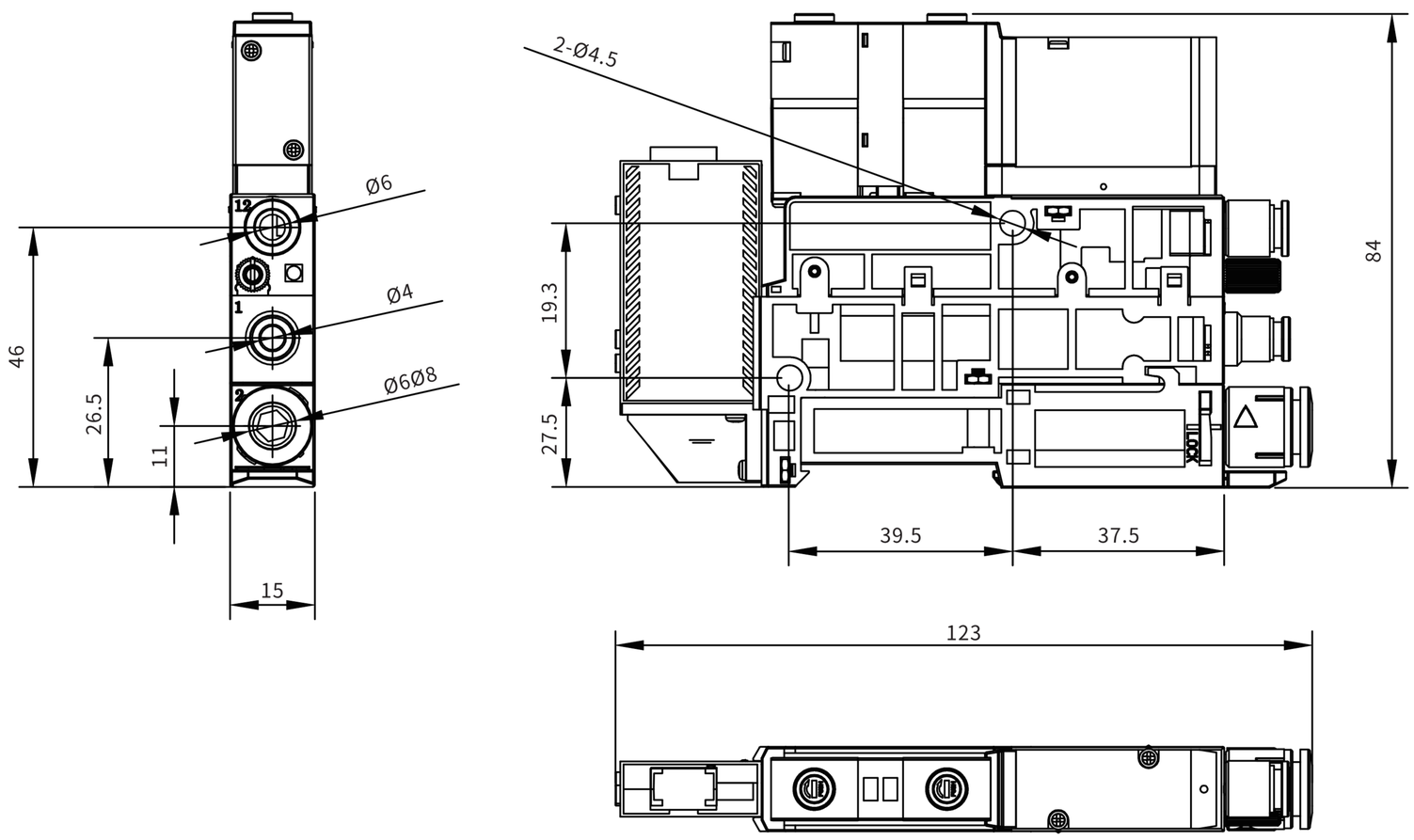

L–type Mounting Bracket

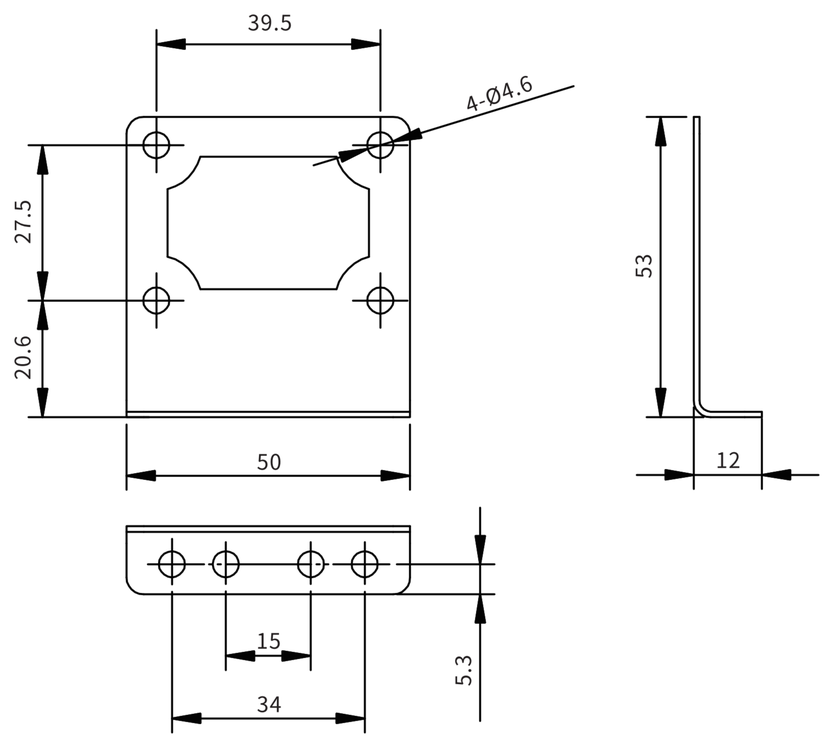

Rail Installation Dimensions and Model

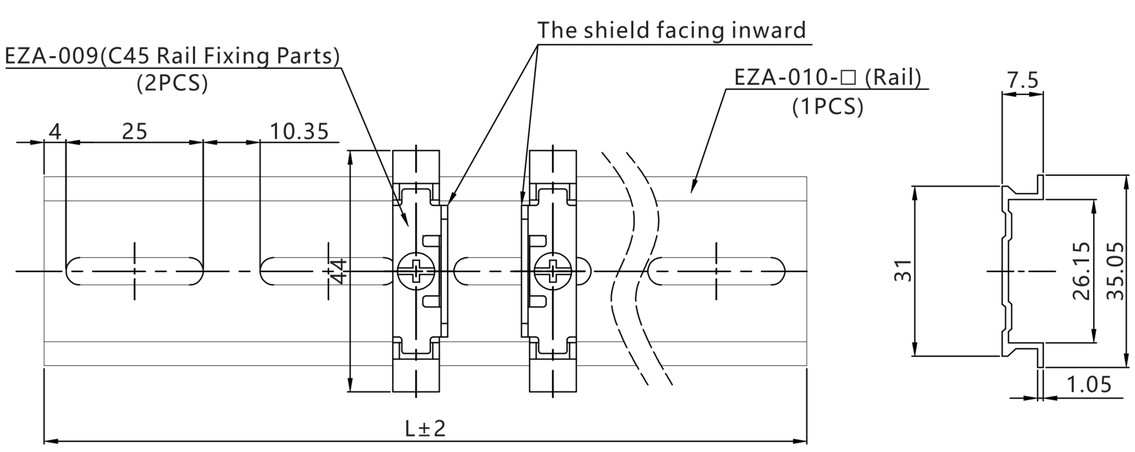

Model	Rail Length (L)	Applicable Links
FJ–EZA–D3	103.5	2~4 Links
FJ–EZA–D4	139	5~6 Links
FJ–EZA–D5	174.5	7~8 Links
FJ–EZA–D6	210	9~11 Links
FJ–EZA–D7	245	12~13 Links
FJ–EZA–D8	280.5	14~16 Links
FJ–EZA–D9	316	17~18 Links
FJ–EZA–D10	351	19~20 Links

Operating instructions (non energy–saving) V2.0

Notes

- Do not use corrosive and inflammable gas or any liquid.
- Use it within the specified operating pressure. Otherwise it can cause damage to the pressure switch or inability to measure correctly.
- Do not drop, hit or apply shock to the Pressure switch. Otherwise damage to the internal parts can result, causing malfunction.
- Turn off the power before connecting the wires. Because it can cause damage due to the wrong wiring or short circuit.
- Do not use in an environment with spattering liquid of oil or solvent.
- This product is not explosion-proof rated. Do not use in atmosphere containing flammable or explosive gases.
- Separate power lines from high voltage lines,avoiding wiring in the same conduit with these lines.

A.Specifications

Product No.		Compound Pressure
Rated pressure range※		–105.0~100.5kPa
Set pressure range※		–100.0~100.kPa
Withstand pressure		500kPa
Applicable fluid		Air, non-corrosive gas and non-flammable gas
Display/Min. setting unit		kPa：0.1 kgf/cm²：0.001 bar：0.001 psi：0.01 inHg：0.1 mmHg：1
Power supply voltage		24 VDC ±10%, ripple max. 10%
Current consumption		≤40mA
Switch output	Output type	2 switching value (NPN/PNP adjustable) + 1 Analog (Voltage) output
	Maximum load current	125mA
	Maximum applied voltage	24V DC
	Internal voltage drop(Residual voltage)	≤1.5V
Display accuracy		± 0.2%F.S. ± 1 digit
Response time		≤2.5ms (Malfunction prevention function: 2.5ms,20ms, 100ms, 500ms, 1000ms, 1999ms optional)
Action display light		OUT1:GREEN OUT2:RED
Environment	Enclosure	Ip40
	Ambient temperature range	Operation: 0 to 50 ℃, Storage: –10 to 60 ℃(No condensation)
	Operating humidity range	Operation, Storage: 35 to 85%RH (No condensation)
	Withstand voltage	1000 VAC in 1 minute(between case and lead wire)
	Insulation resistance	50 MΩ or more (at 500 VDC,between case and lead wire)
	Vibration resistance	Total amplitude 1.5mm,10Hz~150Hz~10Hz scan for 1 minute, 2 hours each directions of X,Y and Z
	Impact resistance	Maximun 980m/s(100G) 3 times each in directions of X,Y and Z
Temperature characteristics		±2%F.S. of detected pressure(25 ℃) at temp.(Range of 0–50℃)
Inlet type		90° inlet Port & No Port
Wire specification		Oil–resistance cable(PVC)(0.15mm)
Weigh		Approx. 58g(with 2 meters lead wire)

Note1: Due to temperature and linear compensation, the upper/lower ranges of the gauge may fluctuate slightly. This is normal.
Note2:Factory default :–50kPa.

B.Output Circuit Wiring Diagrams

NPN Output

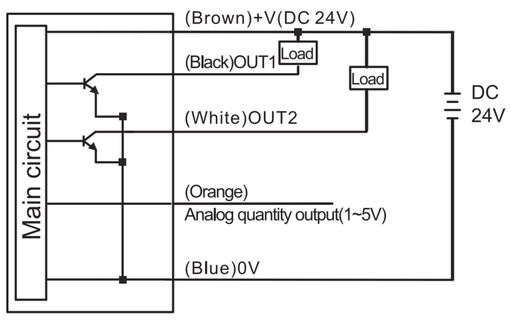

PNP Output

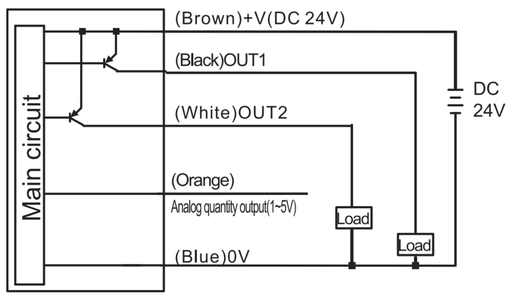

C.Panel Description

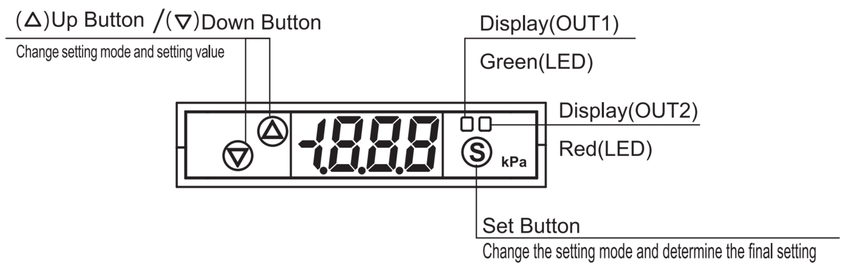

D.Initial Setting Mode

1 Function selection mode

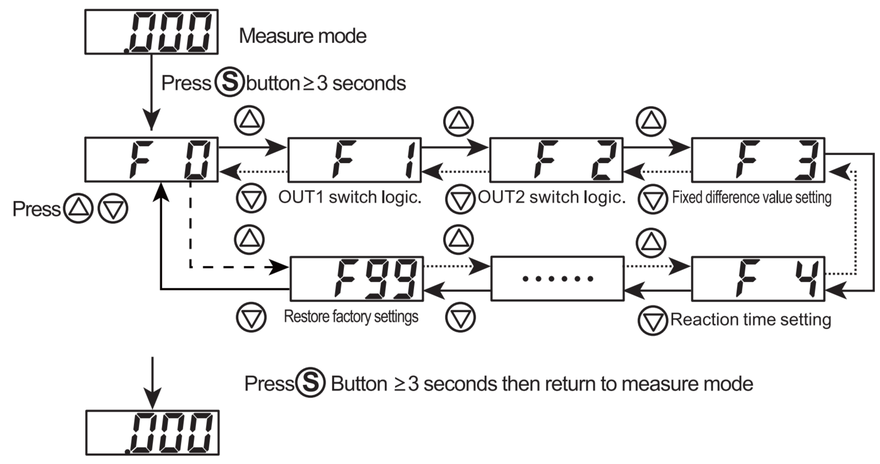

2 Pressure unit(F0)

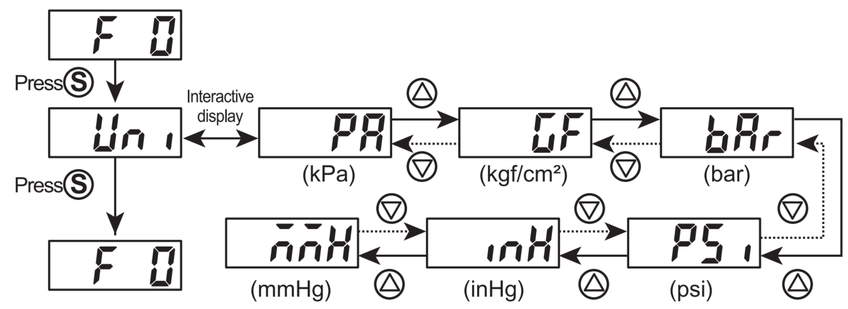

3 OUT Switch Logic (F1)

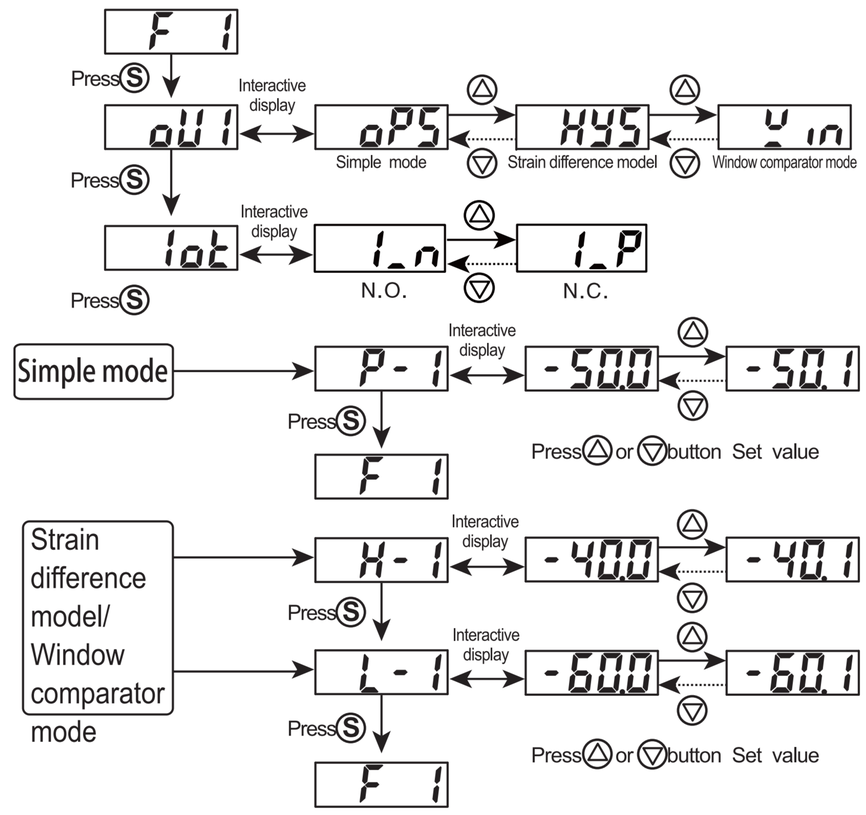

4 OUT2 Switch Logic (F2)

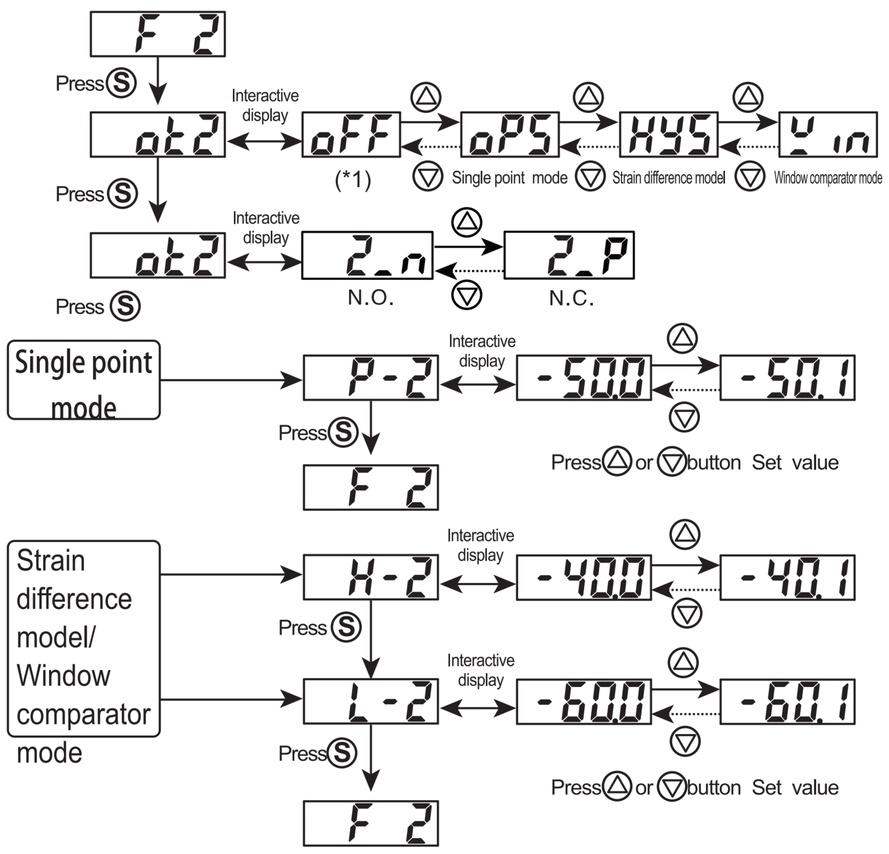

Note(*1) When OUT2 is set to "oFF", skip to the end of F2

Operating instructions (non energy–saving) V2.0

5 Fixed difference value setting(F3)

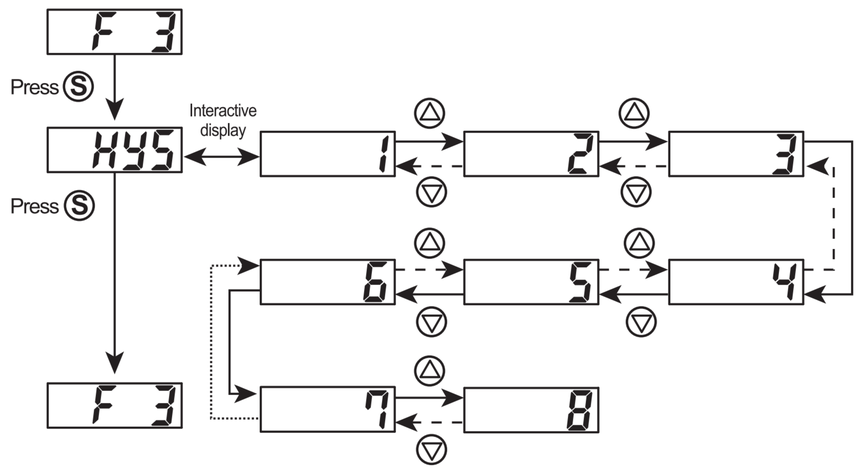

6 Switch reaction time setting(F4)

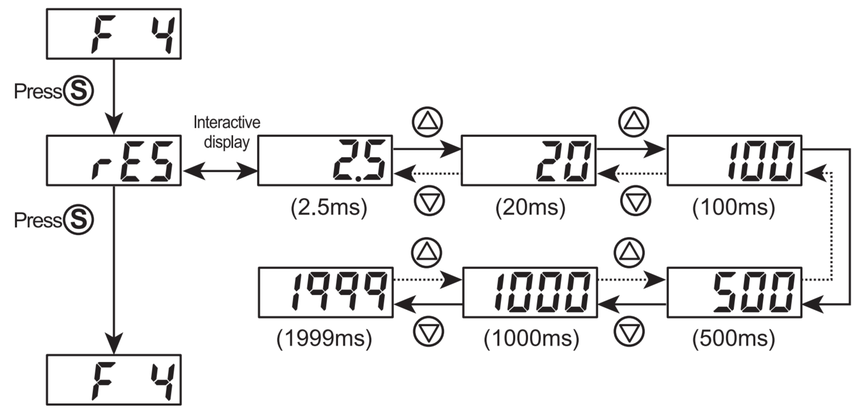

7 Power Save Mode (F6)

◎ During Power-Save mode, the main display will turned off if no buttons is pressed after 30 seconds.

◎ During Power-Save mode, the output LCD may not be synchronize with the output. It is normal and will not affect output operation.

◎ Press any button to turn-on main display temporarily.

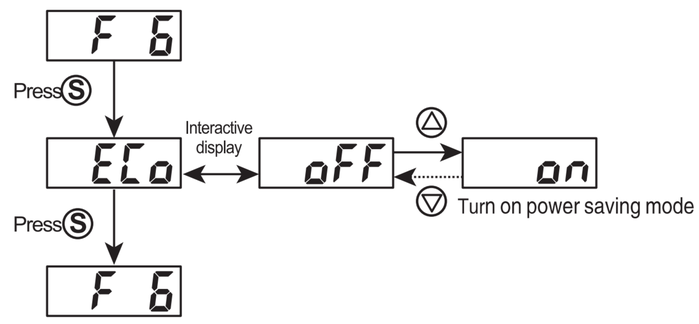

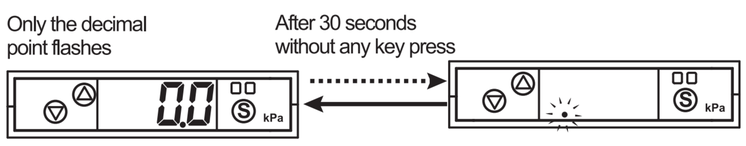

8 Output mode setting(F7)

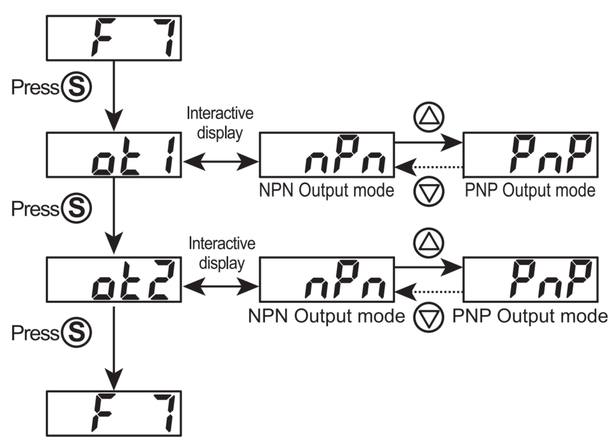

9 Factory reset values(F99)

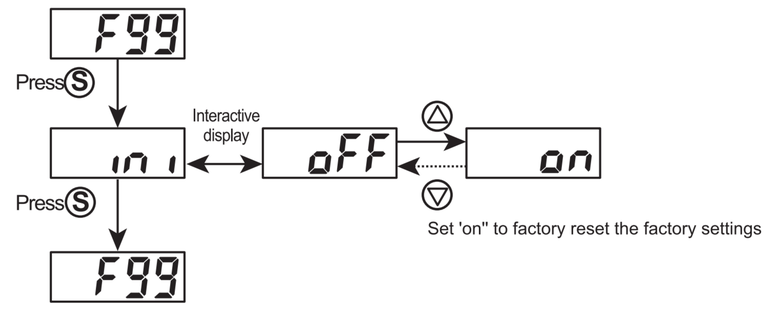

E.Zero point setting

Perss the ▲ + ▼ more than 3s at the same time until the "00" is shown.

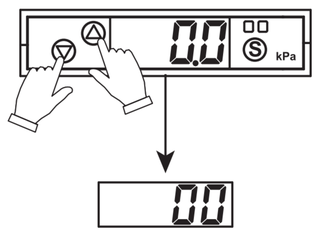

F.Pressure unit translation table

From \ To	kPa	kgf/cm²	mmHg	psi	bar	inHg
1 kPa	1	0.010197	7.500616	0.145038	0.010000	0.2953
1 kgf/cm²	98.0665	1	735.559	14.2233	0.980665	28.95979
1 mmHg	0.13332	0.0013595	1	0.019336	0.0013332	0.039370
1 psi	6.895	0.07031	51.7157	1	0.06895	2.036074
1 bar	100.0000	1.01972	750.062	14.5038	1	29.52998
1 inHg	3.386388	0.034530	25.40000	0.491141	0.033863	1

G. Dimension (unit:mm)

•Wire (unit :mm)

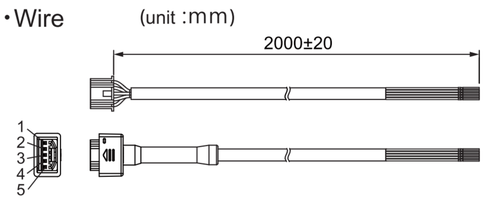

PIN NO.	Color of lead wire
1	DC(+)(Brown)
2	analog output(1-5V)(Orange)
3	OUT2 (White)
4	OUT1 (Black)
5	DC(-) (Blue)

H.Error indication function

Error	Error displayed	Error Condition	Troubleshooting
Residual pressure error	Err	The zero clear range more than 2%F.S	Change input pressure to ambient pressure and perform zero resetagain.
Pressurizing error	HHH	Reset applied pressure to a level within the set pressure range.	Reset applied pressure to a level within the set pressure range.
	LLL	Pressure exceeding the lower limit of the set pressure range is applied.	
System error	Er4	Displayed if an internal system error has occurred. Displayed if an internal system error has occurred.	Turn the power off and on again.If the failure cannot be solved, contact EMC.