H

Hand Push Valve (3/2,5/2,5/3)

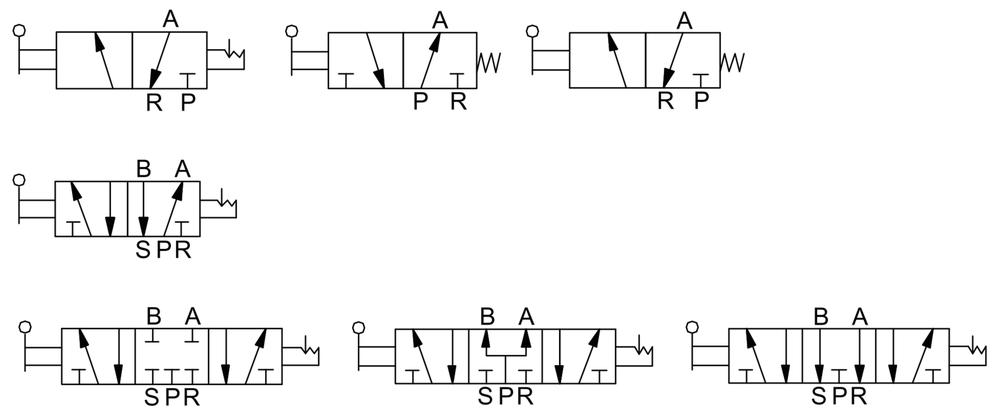

How to Order?

Series No.	Ways	Positions	Valve Body Size	Original Status	—	Port Size	Reset	—	Thread Type
H	3:3 ways 5:5 ways	2:2 positions 2:2 positions 3:3 positions	1: 1 Series 2: 2 Series 3: 3 Series 4: 4 Series	C: Center close P: Center pressure E: Center exhaust (Only for 5/3 way)		1 Series: M5: M5, 06: 1/8 " 2 Series: 06: 1/8 ", 08: 1/4 " 3 Series: 08: 1/4 ", 10: 3/8 " 4 Series: 10: 3/8 ", 15: 1/2 "	Blank:Manual reset S:Spring return		Blank: G P: PT T: NPT

Order Example:
H series hand push valve, 3/2 way, 2 series valve body, NC type, 1/4" port size, manual reset, black valve body, G thread, ERP code is: H322–08

Remarks: Manual reset of two position tee can be divided into non opening and non closing

Specifications

Model	H Series Hand push valve
Working medium	Clean air(After 40 μm filteration)
Acting type	External control
Lubrication	Not required
Working pressure (MPa)	0~0.8
Guaranteed pressure (MPa)	1.2
Working temperature (°C)	–5~60
Seal material	NBR

Product Features

* Manual operated
* Various working style are available

Main Dimension

H321/H322/H323/H324

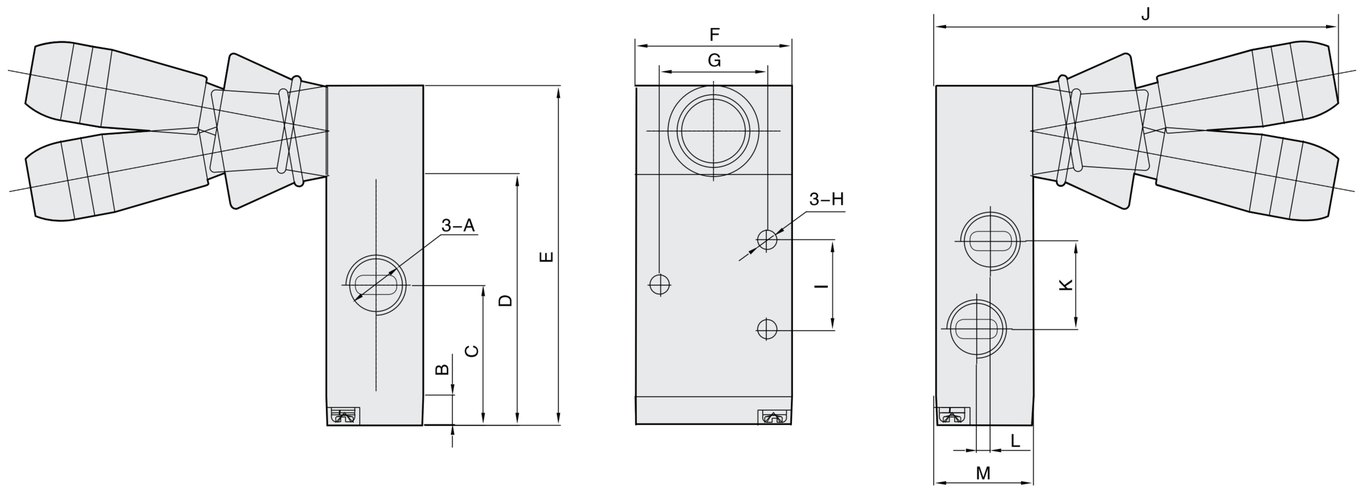

Model/Sign	A	B	C	D	E	F	G	H	I	J	K	L	M
H321–06	G1/8	6.7	23.7	38.7	58.7	27	19	Φ3.1	14	83.8	16	2	18
H322–08	G1/4	6.7	28.7	48.7	68.7	35	24	Φ4.3	20	89	22.5	0	22
H323–10	G3/8	7.5	32.5	57.5	77.7	40	28	Φ4.3	24	99.3	24	2	27
H324–15	G1/2	10	45	80	108	50	36	Φ5.5	28	105.8	31.5	0	34

Main Dimension

H521/H522/H523/H524

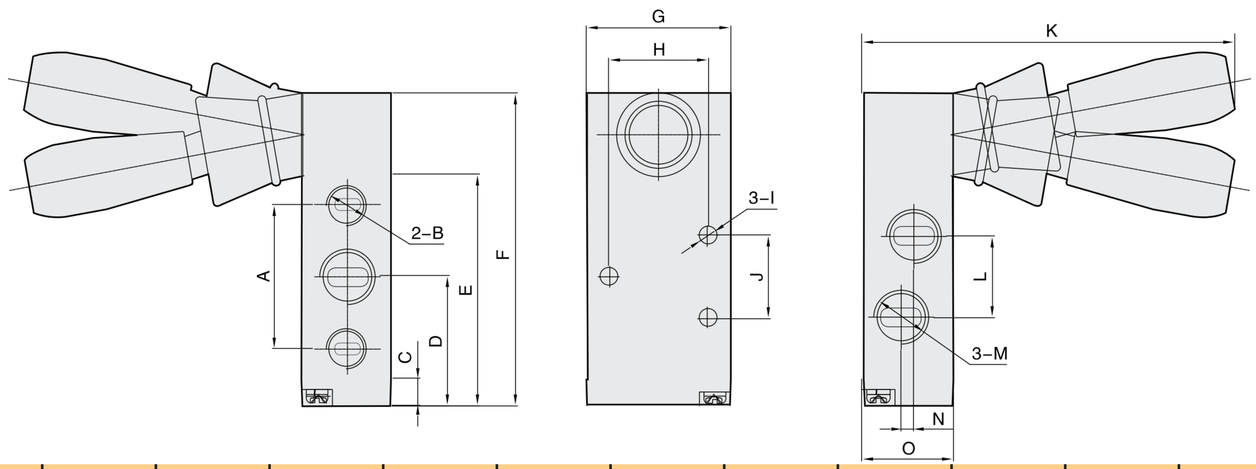

Model/Sign	A	B	C	D	E	F	G	H	I	J	K	L	M	N	O
H521-06	28	G1/8	6.7	28.2	49.7	69.7	27	19	Φ3.3	14	83.8	16	G1/8	3	18
H522-08	35	G1/8	6.7	31.7	56.7	76.7	35	24	Φ4.3	20	91.3	20	G1/4	3	22
H523-10	45	G1/4	7.5	40	72.5	92.5	40	28	Φ4.3	24	96.5	24	G3/8	4	27
H524-15	63	G1/2	10	57	104	132	50	36	Φ5.5	28	105	36	G1/2	4	34

H521-06S / H522-08S / H523-10S / H524-15S

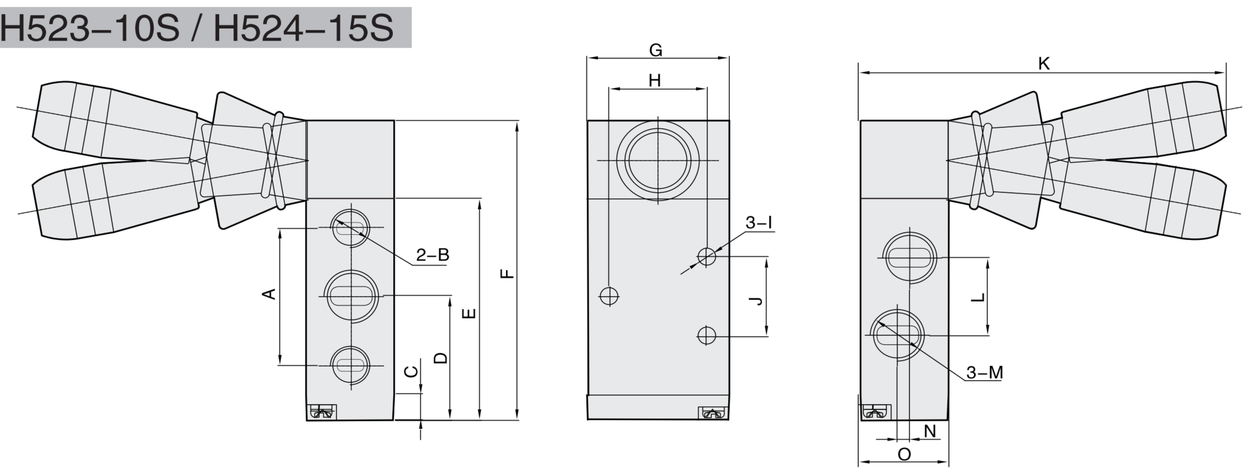

Model/Sign	A	B	C	D	E	F	G	H	I	J	K	L	M	N	O
H521-06S	28	G1/8	6.7	28.2	49.7	69.7	27	19	Φ3.3	14	87.5	16	G1/8	3	18
H522-08S	35	G1/8	6.7	31.7	56.7	76.7	35	24	Φ4.3	20	90	20	G1/4	3	22
H523-10S	45	G1/4	7.5	40	72.5	92.5	40	28	Φ4.3	24	96.5	24	G3/8	4	27
H524-15S	63	G1/2	10	57	104	132	50	36	Φ5.5	28	105	36	G1/2	4	34

H531-06S / H532-08S / H533-10S / H534-15S

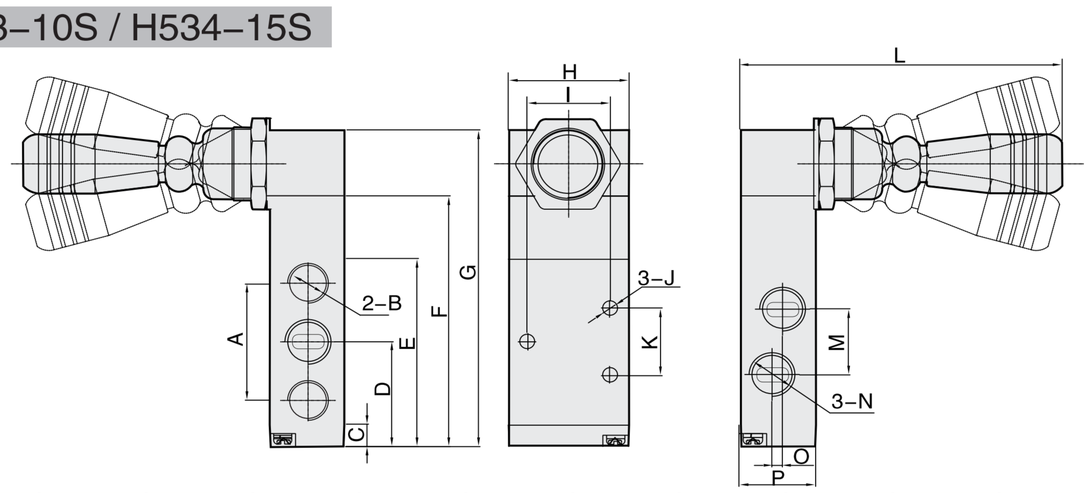

Model/Sign	A	B	C	D	E	F	G	H	I	J	K	L	M	N	O	P
H531-06S	28	G1/8	6.5	28.2	49.7	64.5	84.7	27	19	Φ3.3	14	92.5	16	G1/8	3	18
H532-08S	35	G1/8	6.5	31.7	56.7	75.5	97.7	35	24	Φ4.3	20	94.2	20	G1/4	3	22
H533-10S	45	G1/4	7.5	40	72.5	91.5	113.5	40	28	Φ4.3	24	100	24	G3/8	4	27
H534-15S	63	G1/2	10	57	104	124	154	50	36	Φ5.5	28	109.6	36	G1/2	4	34

H531-06C / H532-08C / H533-10C / H534-15C

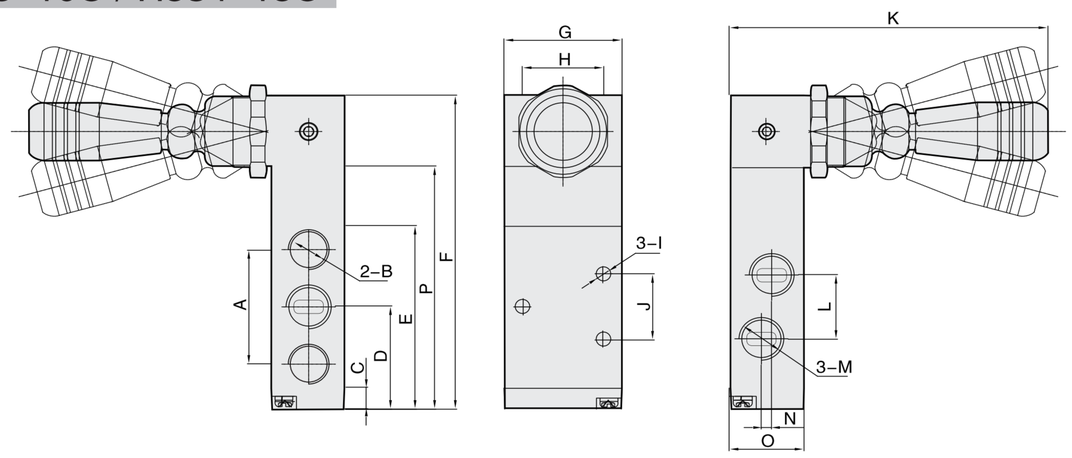

Model/Sign	A	B	C	D	E	F	G	H	I	J	K	L	M	N	O	P
H531-06C	28	G1/8	6.5	28.2	49.7	84.5	27	19	Φ3.3	14	94.5	16	G1/8	3	18	64.5
H532-08C	35	G1/8	6.5	31.7	56.7	97	35	24	Φ4.3	20	95.5	20	G1/4	3	22	75.5
H533-10C	45	G1/4	7.5	40	72.5	113.5	40	28	Φ4.3	24	100	24	G3/8	4	27	91.5
H534-15C	63	G1/2	10	57	104	152	50	36	Φ5.5	28	108	36	G1/2	4	34	124