EIL
Lubricator

Specifications

Model	EIL2000	EIL3000	EIL4000	EIL5000
Proof pressure(MPa)	1.5			
Working Pressure Range(MPa)	0.05~1.0			
Working temperature(℃)	–5~60			
Recommended oil	Turbine No.1 Oil ISOVG32			
Bowl material	Polycarbonate			
Bowl guard	None	Available		
Entrance pressure(MPa)	0.15~1.0			

Model	Specifications			
	* Minimal flow ofoil drop (L/min)	* Rated flow (L/min)	* Port size(G)	Bowl capacity (cm^3)
EIL2000–01	15	1300	1/8	25
EIL2000–02		1345	1/4	
EIL3000–02	30	2310	1/4	50
EIL3000–03	40	2375	3/8	
EIL4000–04	50	5532	1/2	130
EIL5000–06	190	7700	3/4	130
EIL5000–10		8000	1	

* The above information is based on 6.3 Bar supply pressure, the flow of oil drop is 2–3 drops/ min, the temperature of Turbine No.1 oil is 20℃
* The above information is based on 6.3 Bar supply pressure and 1.0 Bar step down
* NPT,PT port size is optional

Main Dimension

EIL2000

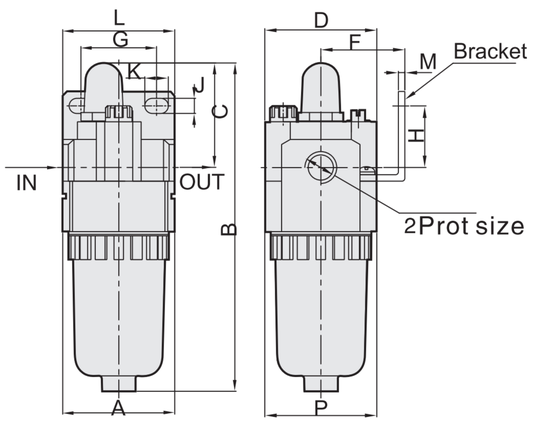

EIL3000–EIL4000

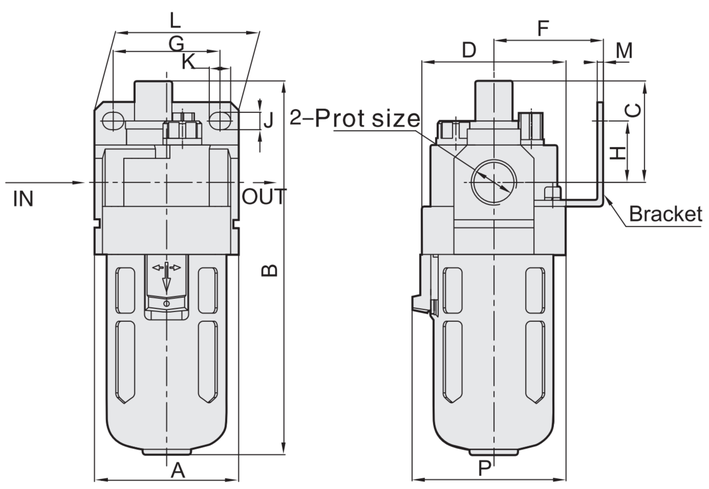

EIL5000

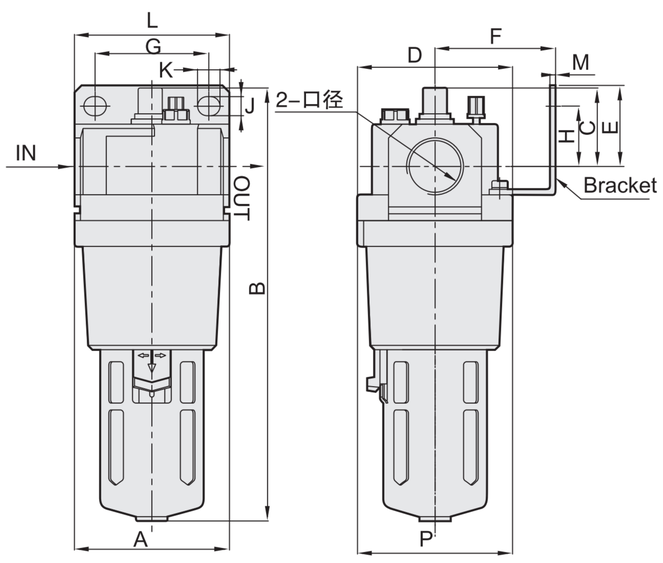

Model	Port Size (G)	A	B	C	D	F	G	H	J	K	L	M	P
EIL2000	1/8"–1/4"	40	115	37.5	40	31	19	14	17	6.8	40	2	40
EIL3000	1/4"–3/8"	53	141	39	53	41	40	23	6.5	8	53	2	56
EIL4000	3/8"–1/2"	70	175	40	70	53	54	26	8.5	10.5	70	2	73
EIL5000	3/4"–1"	90	254	45.5	90	67	66	35	11	13	90	3	90