M

Mechanical Valve (3/2,5/2)

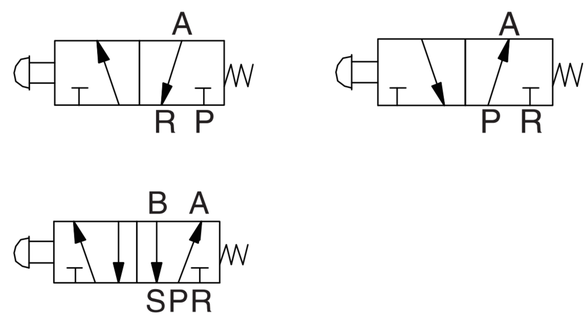

How to Order?

Series No.	Ways	Positions	—	Port Size	Button Type	—	Thread Type
MV MJ M	3: 3 ways 5: 5 ways	2: 2 position		06: 1/8 " 08: 1/4 "	Blank: No button S1B: The button with arrow mark(Black) S2: Roller type S3R: Button with "Reset" mark(Red) S4G: Concave button(Green) S5R: Flat button(Red) S6R: Mushroom head button(Red) S6B: Mushroom head button(Black) Note: S1 and S3 with manual return, Others with spring return.		Blank: G P : PT T : NPT

Order Example:

M series mechanical valve, 3/2 way, 1/8" port size, with black button with arrow mark, G thread, ERP code is: M32–06S1B

Note: Button mechanical valve assembly comprising: a Button component, the mounting bracket, under mounting brackets and mounting screws.

Specifications

Model	MV32–06	MJ32–08	M32–08	M52–08
Working medium	Clean air(After 40 μm filteration)			
Acting type	External control			
Lubrication	Not required			
Working pressure (MPa)	0~0.8			
Guaranteed pressure (MPa)	1.2			
Working temperature (°C)	–5~60			
Max. acting frequency	5 cycles/s			
Port size	1/8 , 1/4			

Product Features

* Black color is standard color, different colors are optional
* Controlled by mechanical force
* Various buttons are available

Main Dimension for Button

S1

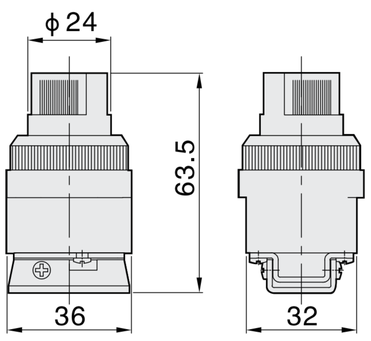

S2

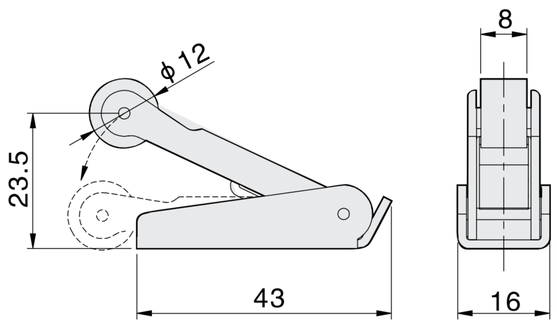

S3

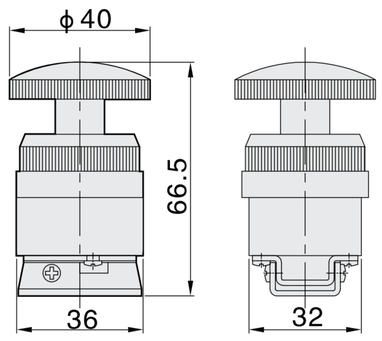

Main Dimension for Button

S4

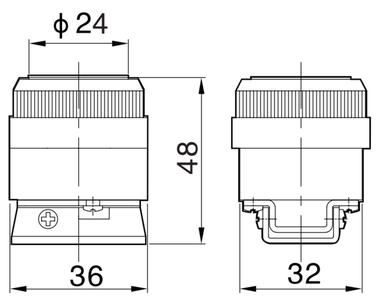

S5

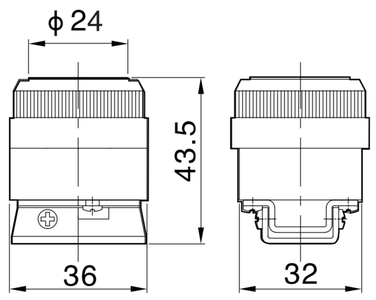

S6

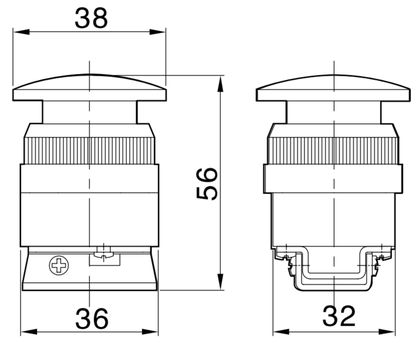

Main Dimension

MV32 Series

MV32–06S1

MV32–06S2

MV32–06S3

MV32–06S4

MV32–06S5

MV32–06S6

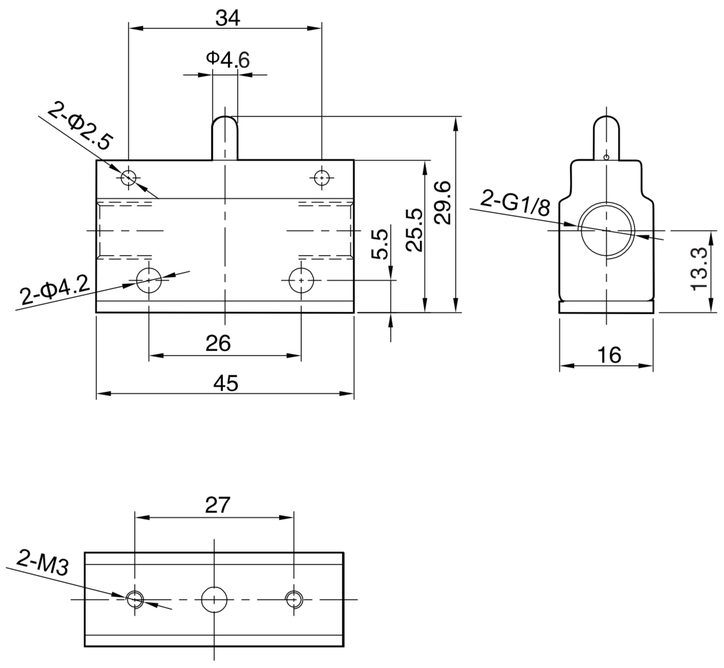

MJ32 Series

MJ32–08S1

MJ32–08S2

MJ32–08S3

MJ32–08S4

MJ32–08S5

MJ32–08S6

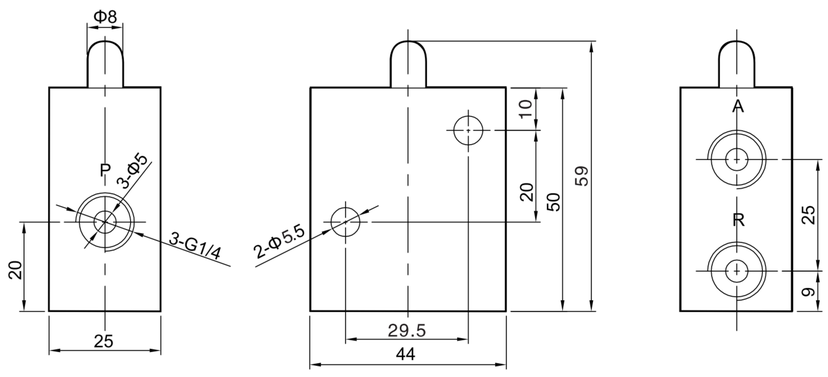

Main Dimension

M32 Series

M32–08S1

M32–08S2

M32–08S3

M32–08S4

M32–08S5

M32–08S6

M32–08

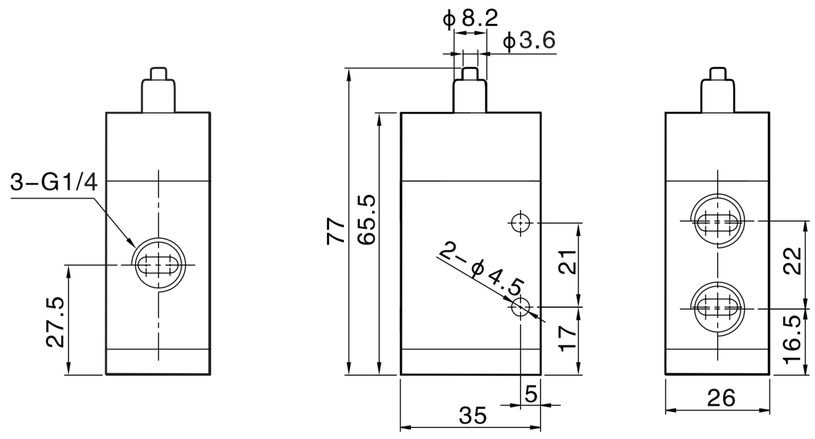

M52 Series

M52–08S1

M52–08S2

M52–08S3

M52–08S4

M52–08S5

M52–08S6
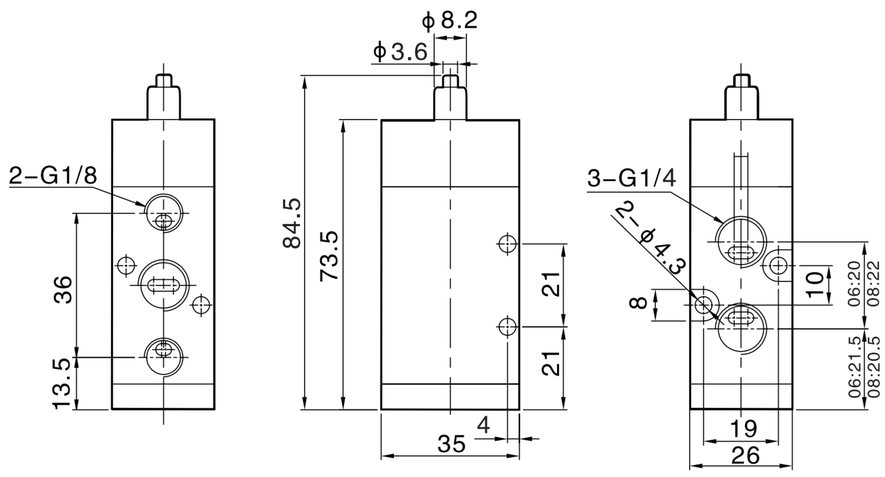
M52–08